SPENCER

made for decisive moments

EMS & AMBULANCE EQUIPMENT CATALOGUE

SPENCER ITALIA
Via Provinciale, 12
43038 Sala Baganza (PR) - Italy
Tel. +39 0521 54 11 11

E-MAIL
info@spencer.it

Spencer exports its products to 120 countries worldwide. In some of these countries, the same operational and approval standards may not always apply. For this reason, there may be differences between the descriptions provided and the delivered items. Spencer constantly strives to improve all the products it manufactures. Therefore, we ask for your understanding as we reserve the right to make changes at any time to shapes, colors, and equipment compared to what is stated in this catalog.

© All rights reserved

Reproduction, even partial, is prohibited without authorization.
"Any unauthorized use of the photographic material contained in this catalog is strictly prohibited. Unauthorized broadcasts on the Internet, TV, or any publications will be prosecuted according to the law."

YOUR BEST PARTNER FOR EQUIPPING YOUR AMBULANCE

Spencer is one of the world's leading manufacturers of emergency, safety, and rescue equipment. With a portfolio of over 1,700 products—including powered and manual stretchers, stretcher support systems, immobilization solutions, resuscitation and suction devices, oxygen therapy, and a wide range of professional bags and backpacks—we provide a complete, one-stop solution for ambulance suppliers worldwide.

Spencer partners with ambulance manufacturers worldwide, delivering ready-to-integrate devices that meet safe, highly functional, and fully customizable—designed to meet the demands of any operational scenario. Each of our solutions is engineered to optimize integration with onboard structures, ensuring compliance with international standards, maximum reliability, and immediate operational readiness.

ABOUT US

WHAT MAKES US THE BEST PROVIDER OF AMBULANCE EQUIPMENT

ONE-STOP SUPPLIER

35 YEARS OF EXPERIENCE

CERTIFIED MEDICAL DEVICES

ADVANCED AFTER-SALES

INTERNATIONAL FOOTPRINT

SPENCER
Made for Decisive Moments

MISSION

For over 35 years, Spencer has designed and delivered cutting-edge equipment that empowers first responders and rescue professionals to operate swiftly, safely, and effectively in decisive moments. Through continuous investment in innovation, technology, and professional expertise, we define the future of emergency response while developing solutions to meet the challenges of tomorrow.

1987

SPENCER FOUNDATION

We lay the foundation for a company dedicated to developing and manufacturing self-loading stretchers and patient transport equipment. With the opening of its first production facility in northern Italy, we begin creating solutions that stood out for their outstanding maneuverability, ease of use, and reliable performance in high-stress emergency situations.

1998

NEW STRETCHER MODEL

We introduce our new CROSS — a compact stretcher made of durable yet lightweight stainless steel. The unique combination of strength, functionality, and portability quickly established CROSS as a trusted support tool for ambulance professionals in demanding rescue situations.

2011

AWARDED IN THE US

The Spencer Tango spine board is named the most innovative emergency product of the year by EMS1 Journal in the United States. Combining lightness, durability, and patient comfort, its distinctive dual-profile design set a new benchmark for spinal immobilization in pre-hospital care.

2012

GLOBAL EXPANSION

As demand for Spencer solutions grows beyond Europe, we expand our international footprint with new offices in India, South America, the Asia-Pacific region, the Middle East, and China. This allows us to stay closer to ambulance builders worldwide, ensuring faster service, stronger partnerships, and products tailored to the specific needs of each market.

2020

PART OF PROTECT MEDICAL

By joining Protect Medical, we open a new chapter. As part of an international group, we streamline innovation and respond more directly to the needs of ambulance builders. With increased investment in research and development, we integrate new product lines that are even more closely aligned with the demands and daily challenges of emergency services worldwide.

CERTIFICATIONS & REGULATORY COMPLIANCE

Safety in emergency vehicles is essential to protect both patients and healthcare professionals. At the European level, two key reference standards ensure this protection: EN 1789 and EN 1865. All our devices are designed and tested in full compliance with these standards, which define the safety, design, and performance requirements for ambulance equipment and patient handling systems.

MORE INFO

MDR REGULATION (EU) 2017/745

This regulation ensures that medical devices placed on the EU market are safe, effective. In short, it establishes:

- Strict design, manufacturing, and market placement requirements for medical devices in the EU.
- Device classification by risk (Class I, IIa, IIb, III).
- Stricter CE certification with greater notified body involvement.
- Full traceability via the UDI system.
- Enhanced post-market safety monitoring.
- Documentation and transparency through the EUDAMED database.

EN 1865

The EN 1865 standard series defines the technical specifications and testing requirements for patient handling equipment used in road ambulances.

It includes specific parts dedicated to different types of devices:

- EN 1865-1 – General stretcher systems and patient handling equipment
- EN 1865-2 – Power-assisted stretchers
- EN 1865-3 – Heavy load stretchers
- EN 1865-4 – Foldable patient transfer chairs
- EN 1865-5 – Stretcher supports

EN 1789

The EN 1789 standard defines the requirements for the design, equipment, and safety of ambulances used in patient transport and treatment. It specifies mandatory equipment by vehicle category and establishes mechanical strength requirements for medical device fastening systems — commonly referred to as 10G dynamic certification. Compliance with EN 1789 is essential for European ambulance type approval, ensuring that all onboard devices are securely fixed and can withstand high accelerations in emergency conditions.

10G DYNAMIC TESTS

The 10G test simulates an ambulance impact at 30–32 km/h: a fastening system designed to hold 70 kg must withstand forces up to 700 kg in all directions. This ensures that stretchers and supports maintain structural integrity, eliminate hazardous sharp edges, and provide secure anchoring even under critical conditions.

INTERNAL TESTING

All Spencer devices undergo rigorous in-house functionality and integrity testing with certified equipment, ensuring full compliance with European standards and delivering reliable, competitive products to vehicle fitters.

Unlike many manufacturers that rely on external laboratories, Spencer operates an internal testing facility for crash tests, prototype validation, and continuous improvements—enabling rapid response to evolving regulations and market demands.

FDA REGISTRATION

Essential for manufacturers and distributors of medical devices in the USA, it ensures that products meet the safety and quality requirements set by U.S. regulations, facilitating market access and reducing regulatory risks.
Most of our rescue and immobilisation systems are FDA certified.

BEYOND DELIVERY: SERVICE, SUPPORT, RELIABILITY

For ambulance builders, reliability does not end at delivery. Spencer ensures every product is backed by a comprehensive after-sales ecosystem designed to keep fleets ready, efficient, and compliant worldwide.

From spare parts to digital support, training, and real-time service tools, our after-sales network is the most advanced in EMS.

Learn

LEARN

Digital work instructions, AI-powered tools, real-time AR guidance, dedicated Garage team.

Repair

REPAIR

Direct connections, spare parts tree, 24/7 e-commerce catalogue for fast replacements.

Care

CARE

Largest EMS service partner network, certified training, continuous improvement through data.

ADDED VALUE FOR END USERS:

REDUCE DOWNTIME
Ambulances stay mission-ready.

ONE-STOP PARTNER
From parts to training, everything in one place.

GLOBAL SUPPORT
Service where you build, wherever ambulances go.

FUTURE-PROOF
AI, AR, and data-driven tools integrated into service.

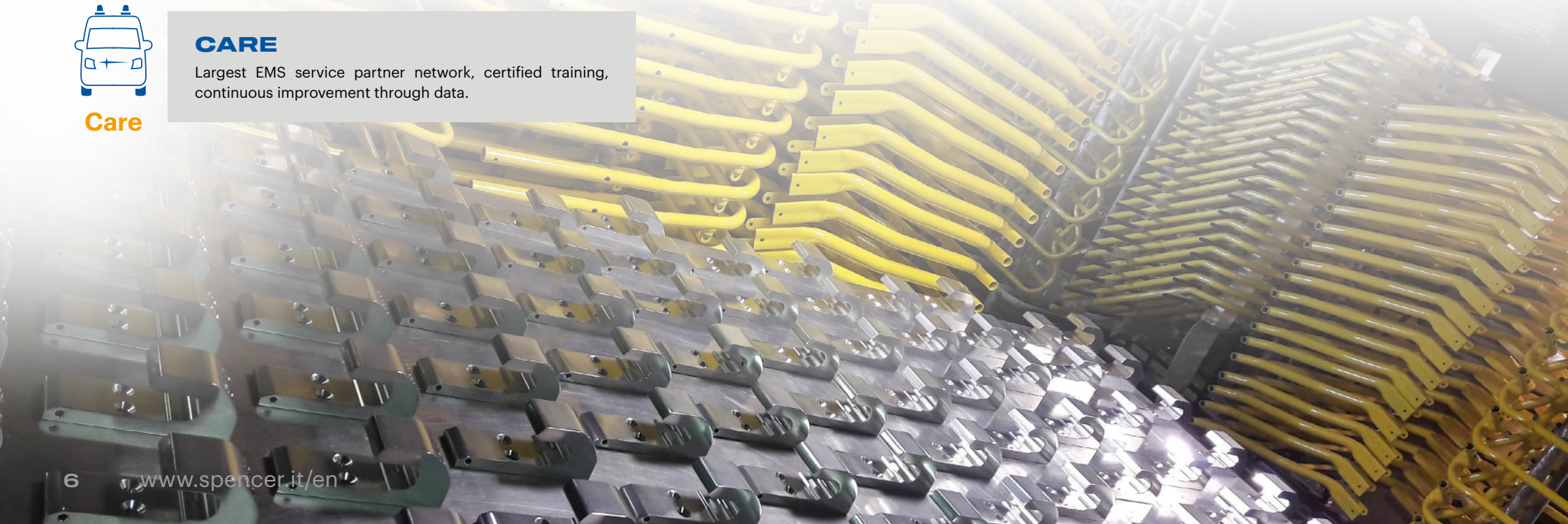

GARAGE

Learn Repair Care

GARAGE is Spencer's ready-to-use digital platform for exclusive dealers, designed to digitalize, centralize, and optimize every after-sales activity — from maintenance and spare parts management to technical support.

Integrated within a modular and customizable ecosystem, **GARAGE** combines process automation, remote assistance, and intelligent tools such as Agent AI with the power of Augmented Reality, delivering a seamless, efficient, and scalable service experience.

garage@spencer.it

PART OF AN INTERNATIONAL MEDICAL GROUP

Spencer is an Italian manufacturer of emergency, safety and rescue, offering a broad portfolio of products, including ambulance stretchers, patient transport systems, resuscitation and immobilization devices. Everything is designed to support EMS professionals, ambulance builders and healthcare providers with reliable, purpose-built solutions worldwide.

PAX-Bags is a global brand focused on high-quality emergency and rescue bags, backpacks and transport systems for EMS, fire, police and military use. Its modular, durable equipment is developed with operational professionals to deliver practical, configurable solutions for real-world emergency response.

Promeba is a Spanish specialist in emergency and ambulance transport equipment, producing powered and manual ambulance stretchers, support systems and transport chairs engineered to enhance usability and protect EMS personnel during operations.

CA.MI is an Italian manufacturer of electromedical equipment and medical devices, serving healthcare professionals worldwide since 1984. Its product range includes respiratory care, surgical suction units, diagnostics, rehabilitation aids, and baby-care devices, all designed for reliability, certified quality and everyday clinical use in over 100 countries

aluderm+ is a German brand specializing in gentle, high-performance wound care. Its aluminum-coated technology prevents dressings from sticking to the wound, supports healing, and enables painless dressing changes. Trusted for decades in emergency services, hospitals, and first-aid applications.

Ruth Lee Ltd is a UK-based leader in the design and manufacture of realistic rescue and medical training manikins. Its products enable professional training in water rescue, fire services, healthcare and technical rescue sectors, helping teams build competence and confidence for critical lifesaving tasks.

RescueTECH is a U.S. provider of technical rescue and life-safety equipment for fire, industrial, military and tactical rescue teams. With decades of experience in rope rescue and technical extrication gear, it supplies stretchers, harnesses, ropes, water rescue tools, training manikins and trauma kits, focused on meeting NFPA standards and the operational needs of professional rescuers

GLOBAL ONE-STOP SUPPLIER

MEDICAL GAS DISTRIBUTION LINES

See page **67**

RESUSCITATION AND SUCTION

See page **61**

AMBULANCE STRETCHERS

See page **10**

IMMOBILIZATION AND RESCUE DEVICES

See page **40**

AMBULANCE STRETCHERS SUPPORT

See page **29**

TRANSPORT AND STAIR CHAIRS

See page **34**

EMERGENCY BAGS

See page **82**

FIRST AID AND DIAGNOSTICS

See page **76**

AMBULANCE STRETCHERS

HOW TO CHOOSE THE RIGHT STRETCHER FOR YOUR AMBULANCE

WORKING MECHANISM

Stretchers can be electric or self-loading. Electric systems reduce strain and allow lifting heavy weights with the push of a button, while manual ones work with the pull of intuitive levers. **Spencer offers both powered and self-loading stretchers to match different operational needs.**

LOAD CAPACITY

Load capacity must cover both patient weight and additional equipment carried on the stretcher. Each stretcher has a fixed maximum rating. **Spencer stretchers range from 170 kg to 300 kg, covering all transport scenarios.**

MATERIALS

Steel and aluminum are the primary materials used in stretcher frames. All our stretchers are manufactured from stainless steel. **In our most advanced models, we apply a microbead peening treatment with a protective finish to resist impacts and scratches, ensuring greater durability.**

BARIATRIC VS STANDARD TRANSPORT

For heavier patients, bariatric solutions are required, either through stretcher board expansions or side-bar accessories. **Spencer includes dedicated bariatric stretchers and expansion kits within its range.**

LOADING HEIGHT

The stretcher's loading height must fit the ambulance floor level and fixation system. Wrong alignment compromises safety during loading and unloading. **Spencer produces stretchers with multiple loading heights to fit any ambulance configuration.**

SHORTENING FRAME

In confined spaces like lifts or narrow passages, a collapsible or shortening frame ensures maneuverability. **Most of Spencer stretchers integrate compact frame solutions for tight-space navigation.**

ADJUSTABLE HEIGHTS

Height adjustability reduces operator strain and helps patient transfers. Tipically stretchers can be fixed, with intermediate height or with multiple levels. **Spencer wide range of stretcher includes monobloc and multi-height systems to ease both transfer and handling.**

PIVOTING WHEELS

Four pivoting wheels improve maneuverability and reduce operator effort. Advanced wheel systems enhance control in all environments. **Spencer stretchers feature pivoting wheels with brakes, with select models including the Twist front-wheel unlock system.**

DEFINING THE CORRECT LOADING HEIGHT

Loading height is the distance between the ground and the point where the stretcher locks into place inside the ambulance. It determines compatibility between stretcher, vehicle, and fixation/support system. This parameter directly impacts operator safety, ergonomics, and the speed of patient loading and unloading. To define the right loading height, both national and European regulations and the stretcher manufacturer's technical data must be considered.

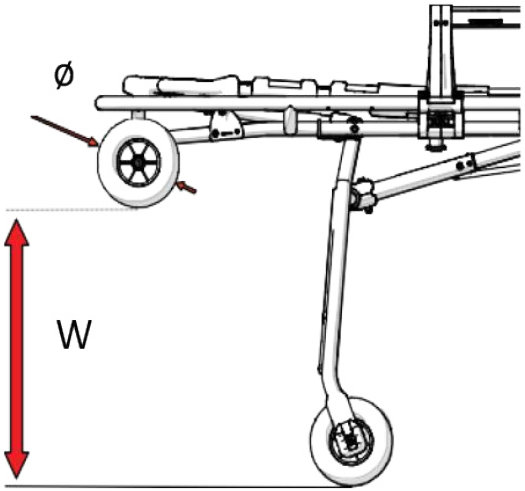

Loading height	Model
50 cm	CARRERA TEC, CARRERA PRO
55 cm	CARRERA XL
60 cm	AGILE, STAR-K, CARRERA TEC, CARRERA PRO
63 cm	CARRERA TEC
65 cm	CROSS UP, CROSSOVER CHAIR
66 cm	CARRERA TEC
68 cm	AGILE, STAR-K, CARRERA TEC, CARRERA PRO, CARRERA XL
72 cm	CARRERA PRO
73 cm	CARRERA TEC
75 cm	AGILE, STAR-K, CARRERA TEC, CARRERA XL

Note: *With the lowering extension accessory, the stretcher loading height can be adjusted to a range can be lowered 5 cm.*

In pratice, three key aspects matter most:

CORRECT LOADING HEIGHT

It reduces operator strain and makes stretcher handling safer and faster.

Loading height range	Model
58-67 cm	CROSS, CROSSOVER

CONSIDER SUPPORT & FIXATION SYSTEMS

Always measure the ambulance floor with support and fixation systems installed. Ignoring these components leads to incorrect loading height selection and increased operator strain.

STRETCHERS WITH ADJUSTABLE LOADING HEIGHT

Stretchers equipped with this feature adapt to different ambulance configurations and compensate for changes in vehicle height caused by wear of the ambulance suspension systems, which can lower the effective loading level over time.

Floor height range	Model
42-66 cm	KINETIX (WITH RAIL WITHOUT SPINE BOARD HOUSING)
42-75 cm	KINETIX (WITH RAIL AND SPINE BOARD HOUSING)

HOW TO MEASURE THE LOADING HEIGHT

The loading height of an ambulance is regulated according to vehicle type and market requirements, since ambulance configurations vary worldwide, including ground clearance.

To determine loading height correctly, the vehicle must be fully equipped and measured at the points indicated in the diagrams (A–H). These values are essential to: verify compatibility with stretchers, fixation, and support systems; ensure compliance with safety regulations; guarantee reliable and ergonomic patient handling.

A Height of the step platform (if present) from the ground.

B Height of the patient compartment floor from the ground.

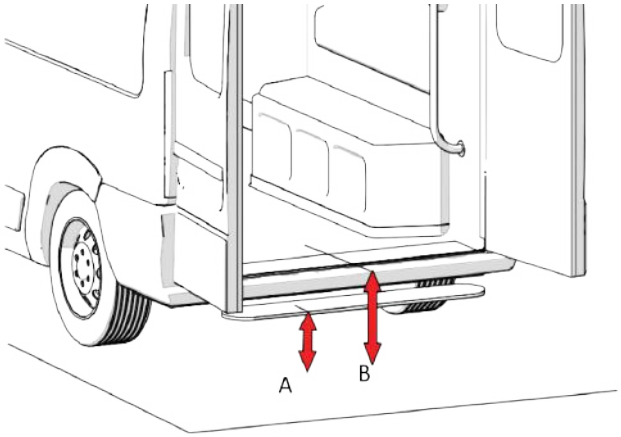

C Depth of the step platform (if present).

D Thickness of the rear door.

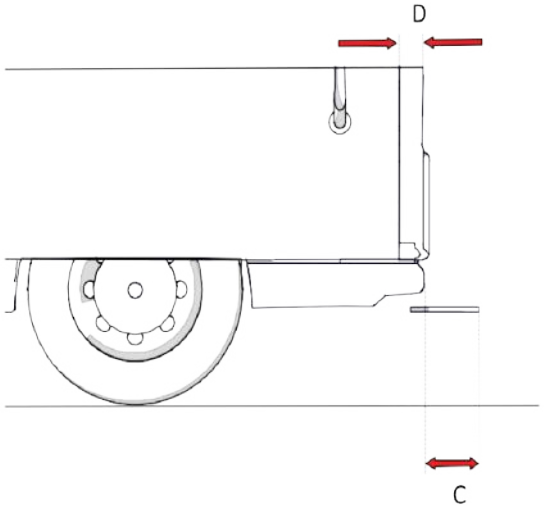

E Length of the stretcher support ramp (if present).

F Height of the stretcher support.

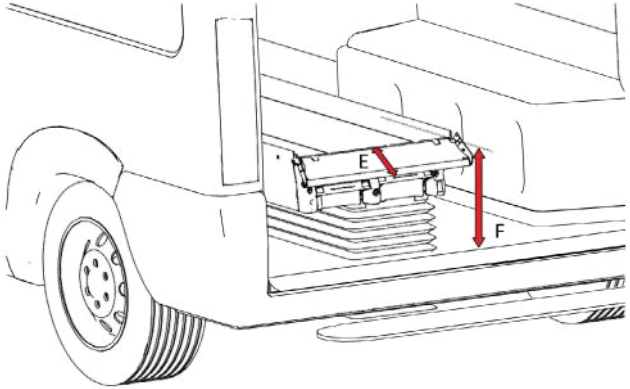

G Ground clearance of the stretcher support fully extended.

H Ground clearance of the stretcher support ramp (if present) fully extended.

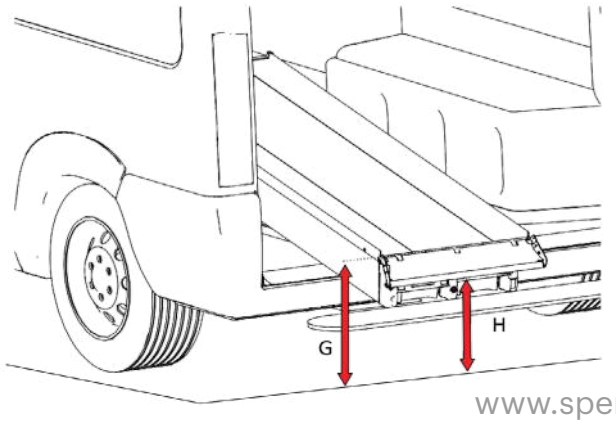

KINETIX

LIFTING, LOADING AND LOWERING 300 KG WITH THE PUSH OF A BUTTON

KINETIX is a powered stretcher designed to streamline loading, lifting and lowering maneuvres, supporting weights of up to 300 kg effortlessly. Foldable and adjustable side rails expand the stretcher's platform, facilitating the transportation of bariatric patients. The best model for those willing to protect operator's back whilst providing unmatched versatility.
Materials: Al, Stainless steel.

- **BATTERY POWERED**
- **SHORTENING BOARD**
- **TELESCOPING HANDLES**
- **SWIVEL WHEELS WITH DIRECTIONAL LOCKING**
- **BARIATRIC TRANSPORT**
- **RECHARGEABLE BATTERY: 2 X 24 LITHIUM**

RAIL

FASTENING SYSTEM FOR MOTORIZED STRETCHER

More info

Load capacity **300 KG**

RAIL comes with the KINETIX stretcher to optimize loading and unloading onto rescue vehicles.Extractable and laterally movable, it is also available with a compartment for a spine board or pick-up stretcher.
Materials: Al, Stainless steel.

- **ASSISTED LOADING**
- **EXTRACTABLE AND LATERALLY MOVABLE**
- **AUTOMATIC STRETCHER RECHARGING**
- **AVAILABLE SPINE BOARD HOUSING**

CODE	MODEL	MIN./MAX. LENGTH	MIN./MAX. WIDTH	MIN./MAX. HEIGHT	LOAD CAPACITY	LOADING HEIGHT	WEIGHT	TRENDELENBURG / FOWLER TILT	COLOUR
KN00001	KINETIX electric stretcher	162,5 / 200 cm	59 / 90 cm	42 / 130 cm	300 kg	Max. 92 cm	88 kg	30º / 17º	○●

THE PRODUCT IS DELIVERED ALONG WITH: RAIL Support system for stretchers – IV foldable pole – Ergonomic extendable headrest – Heat-sealed waterproof PVC mattress – Restraint belts with locking push button – Document pocket. ELECTRICAL EQUIPMENT INCLUDED: Lockable battery cabinet – Built-in automatic charging system – External battery charger.

Foldable and adjustable side rails expand the stretcher's platform, facilitating the transportation of bariatric patients with a load limit of 300 kg.

Watch the video

Featuring an intuitive control panel, operators can seamlessly adjust the stretcher's height, manage lifting and lowering movements with precision, and enhance visibility with LED lights.

The overall length of the stretcher can be shortened by lifting the backrest and retracting the telescopic handles: this is particularly useful when transporting the stretcher in confined spaces such as lifts.

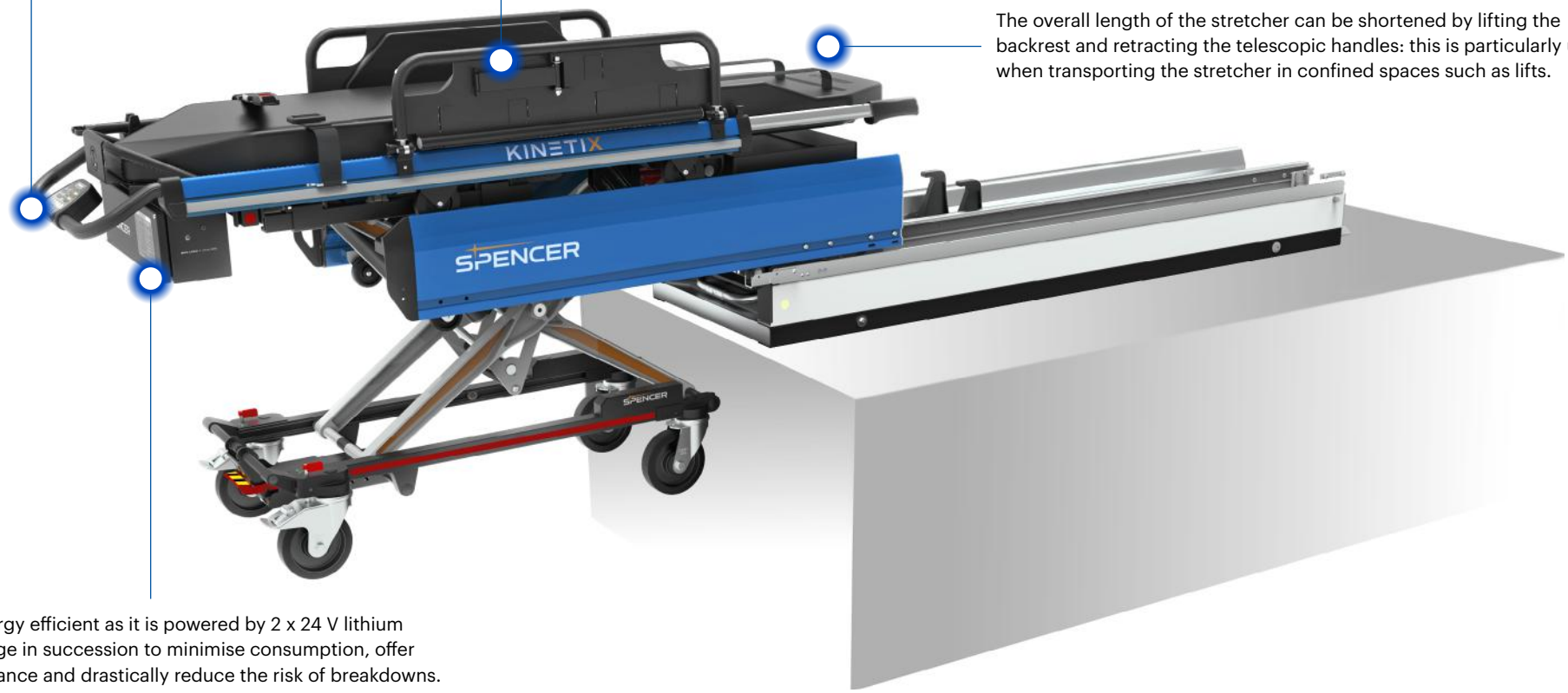

The KINETIX is energy efficient as it is powered by 2 x 24 V lithium batteries that charge in succession to minimise consumption, offer increased performance and drastically reduce the risk of breakdowns.

CODE	MODEL	SPINE BOARD/ PICK-UP STRETCHER COMPARTMENT	DIMENSIONS	LOAD CAPACITY	LOADING HEIGHT	SIDEWAYS MOVEMENT	EXTRACTION	WEIGHT	COLOUR
KN00002	RAIL electric stretcher support system	✔	204 x 60 cm	300 kg	75 cm	30 cm	164 cm	140 kg	○●
KN00003	RAIL electric stretcher support system	N.A.	204 x 60 cm	300 kg	66 cm	30 cm	164 cm	117 kg	○●

HOW TO LOAD SELF-LOADING STRETCHER

All Spencer's self-loading stretcher models feature a loading mechanism that shifts the load weight onto the stretcher and the ambulance floor, requiring the operator only to push the stretcher forward and press its handles to bend the stretcher's legs. Wheels with large diameter help with friction, further reducing additional strain on the operator's back. Even with heavy patients one single caregiver is enough to perform loading operations. The loading phase is very intuitive and back-friendly.

1 Position our stretcher so that the loading wheels are on top of the ambulance floor (or the ambulance stretcher fixation system).

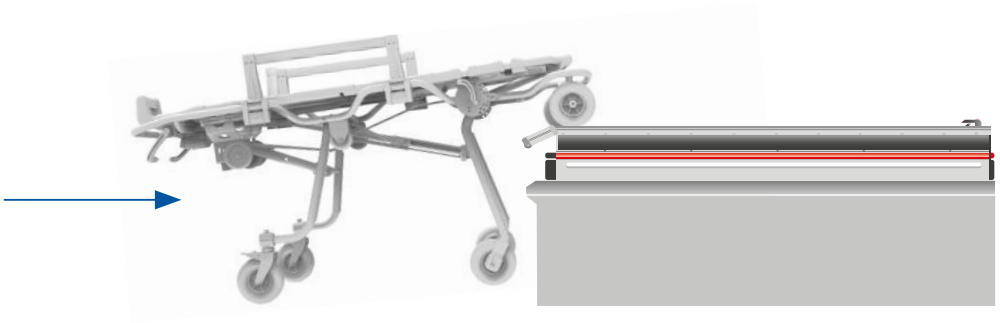

2 Push the stretcher forward and lift the right hand side handle (the red one). As you keep pushing, the front legs will start folding.

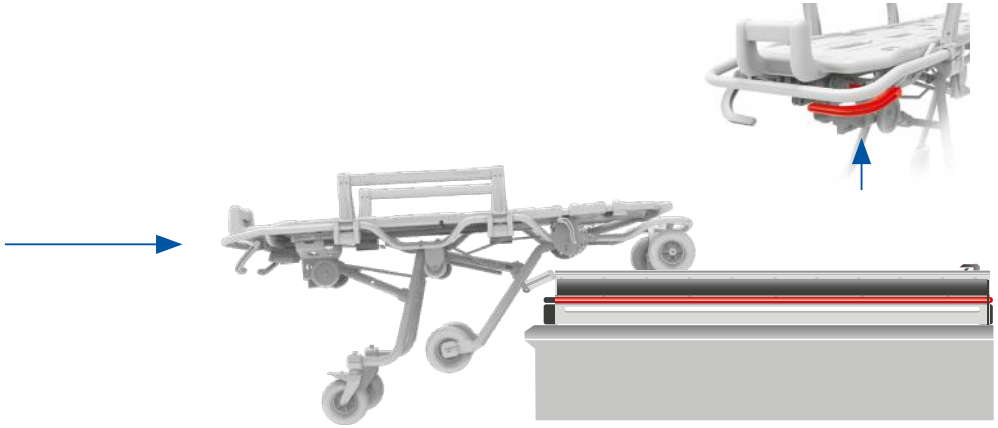

3 Once the front legs are fully folded under the platform, lift the left-hand side handle (the green one) and continue pushing: the rear legs will start folding as well.

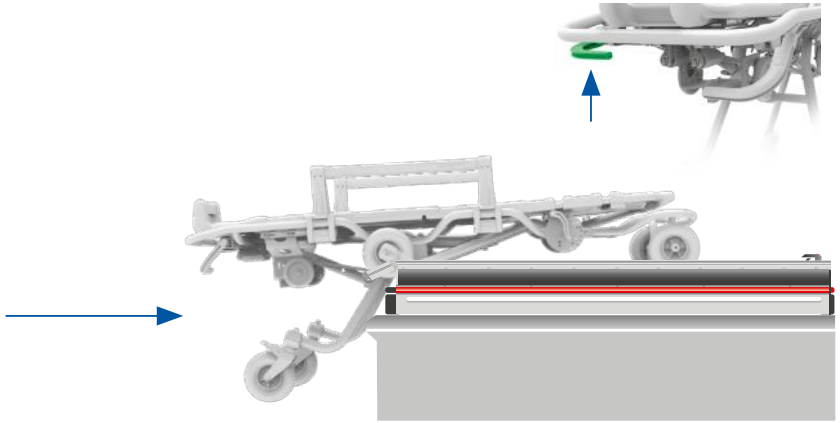

4 With a final push, the entire stretcher will be fully on board and the locking mechanism will engage. The rear resting wheels will be oriented inward for a more compact footprint.

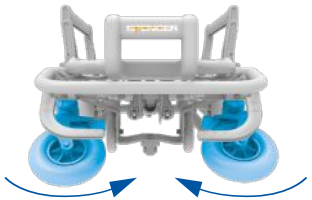

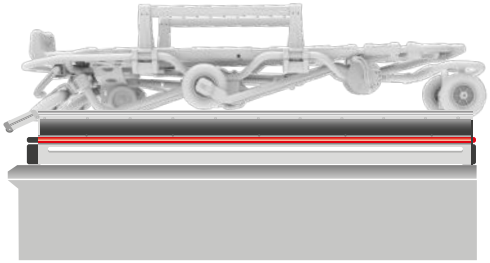

AGILE

STRETCHER WITH 6 ADJUSTABLE HEIGHTS AND SHORTERNING FRAME

More info

Load capacity **260 KG**

AGILE is one of the most advanced stretcher models on the market. It offers multi-level adjustments, can be shortened to navigate confined spaces, and supports loads up to 260 kg, ensuring exceptional versatility. The frame is constructed from stainless steel with a micro-shot-peened finish.
Materials: Al, Stainless steel, PE.

FIXATION SYSTEM REQUIRED

S-MAX PRO
10G fastener for stretchers.

- **6 ADJUSTABLE LEVELS**
- **MICRO SHOT-PEENED STAINLESS STEEL FRAME**
- **ASSISTED LOWERING SYSTEM**
- **SHORTENING FRAME**
- **2 SWIVELING WHEELS**
- **2 WHEELS WITH TWIST SYSTEM**

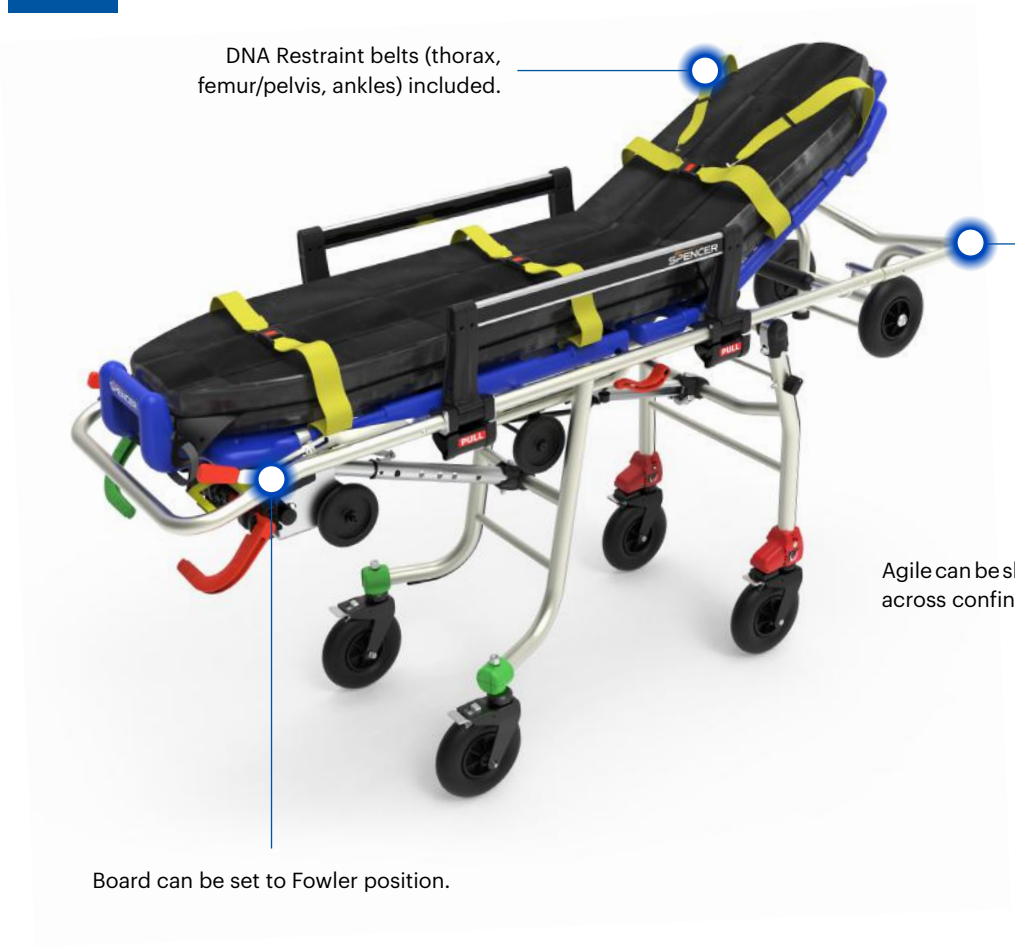

Agile can be shortened for better maneuvrability across confined spaces.

CODE	CODE WITH MATTRESS INCLUDED	MODEL	DIMENSIONS	LOAD CAPACITY	LOADING HEIGHT	WEIGHT	ADJUSTABLE LEVELS	SHORTENING FRAME	BRAKES	FOWLER	FRAME COLOUR	BOARD COLOUR
AG00001-Z0	AG00001-D0	AGILE 60	197 x 57 cm	260 kg	60 cm	56,5 kg	6	✔	Rear / front	✔		
AG00002-Z0	AG00002-D0 AG00002-D1*	AGILE 68	197 x 57 cm	260 kg	68 cm	56,5 kg	6	✔	Rear / front	✔		
AG00003-Z0	AG00003-D0	AGILE 75	197 x 57 cm	260 kg	75 cm	56,5 kg	6	✔	Rear / front	✔		

** Stretcher advancement extension included.*

STAR-K

SELF-LOADING STRETCHER WITH EXTENDABLE HANDLES

More info

Load capacity **260 KG**

STAR-K is a self-loading stretcher with extendable handles for better usability and transport. Available in four models, each with distinct features, the stretcher can be easily adjusted to both Trendelenburg and Fowler positions.
Materials: Al, Stainless steel, PE.

MICRO SHOT-PEENED STAINLESS STEEL FRAME

EXTENDABLE HANDLES

Extendable handles on the foot-side for improved maneuverability.

Restraint belts (thorax, femur/ pelvis, ankles) included.

FIXATION SYSTEM REQUIRED

S-MAX PRO
10G fastener for stretchers.

CODE	CODE WITH MATTRESS INCLUDED	MODEL	DIMENSIONS	SHORTENED LENGTH	LOAD CAPACITY	LOADING HEIGHT	WEIGHT	HEIGHTS	BRAKES	TWIST SYSTEM	FRAME COLOUR	BOARD COLOUR
ST80020-Z0	ST80020-D0	STAR-K ACTIV 60	197,5 x 57,5 cm	179 cm	260 kg	60 cm	53 kg	3	Rear	–		
ST80021-Z0	ST80021-D0	STAR-K ACTIV 68	197,5 x 57,5 cm	179 cm	260 kg	68 cm	53 kg	3	Rear	–		
ST80022-Z0	ST80022-D0	STAR-K ACTIV 75	197,5 x 57,5 cm	179 cm	260 kg	75 cm	53 kg	3	Rear	–		
ST80030-Z0	ST80030-D0	STAR-K ACTIV TS 60	197,5 x 57,5 cm	179 cm	260 kg	60 cm	53 kg	3	Rear/front	✔		
ST80031-Z0	ST80031-D0	STAR-K ACTIV TS 68	197,5 x 57,5 cm	179 cm	260 kg	68 cm	53 kg	3	Rear/front	✔		
ST80032-Z0 ST80032-Z1*	ST80032-D0 ST80032-D1*	STAR-K ACTIV TS 75	197,5 x 57,5 cm	179 cm	260 kg	75 cm	53 kg	3	Rear/front	✔		
ST80000-Z0	ST80000-D0	STAR-K 60	197,5 x 57,5 cm	–	260 kg	60 cm	53 kg	2	Rear	–		
ST80001-Z0	ST80001-D0	STAR-K 68	197,5 x 57,5 cm	–	260 kg	68 cm	53 kg	2	Rear	–		
ST80002-Z0	ST80002-D0	STAR-K 75	197,5 x 57,5 cm	–	260 kg	75 cm	53 kg	2	Rear	–		
ST80010-Z0	ST80010-D0	STAR-K+ 60	197,5 x 57,5 cm	–	260 kg	60 cm	53 kg	3	Rear/front	✔		
ST80011-Z0	ST80011-D0	STAR-K+ 68	197,5 x 57,5 cm	–	260 kg	68 cm	53 kg	3	Rear/front	✔		
ST80012-Z0	ST80012-D0	STAR-K+ 75	197,5 x 57,5 cm	–	260 kg	75 cm	53 kg	3	Rear/front	✔		

** Stretcher advancement extension included.*

CROSSOVER

HIGH LOAD CAPACITY AND MANEUVERABILITY

More info

Load capacity **250 KG**

CROSSOVER stretcher is designed to offer excellent operability and durability in every emergency situation. Suitable for bariatric applications and easily customizable, it features a sturdy curved frame with multiple grip points for optimal use and can be inclined or adjusted into an intermediate level.
Materials: Al, Stainless steel, PE.

FIXATION SYSTEM REQUIRED

S-MAX PRO
10G fastener for stretchers.

- **MICRO SHOT-PEENED STAINLESS STEEL FRAME**
- **SHORTENABLE FRAME**
- **4 SWIVELLING WHEELS WITH TWIST**
- **RACK AND PINION SYSTEM TO ADJUST LOADING HEIGHT**

The folding front trolley enhances operation in tight spaces or small-sized lifts.

The Twist System is activated by a single lever under the footrest that quickly unlocks or locks the front wheels, allowing smooth and safe maneuvering in confined spaces without lifting the stretcher.

CODE	CODE WITH MATTRESS INCLUDED	MODEL	DIMENSIONS	LOAD CAPACITY	LOADING HEIGHT	WEIGHT	HEIGHTS	TWIST SYSTEM	BRAKES	FOWLER	FRAME COLOUR	BOARD COLOUR
CR72040-Z0 CR72040-Z1*	CR72040-D0 CR72040-D1*	CROSSOVER	197 x 56 cm	250 kg	From 58 to 67 cm	51 kg	3	✔	Rear	–	◐	●
CR72050-Z0	CR72050-D0	CROSSOVER	197 x 56 cm	250 kg	From 58 to 67 cm	51 kg	3	✔	Rear	–	◐	●
CR72060-Z0	CR72060-D0	CROSSOVER	197 x 56 cm	250 kg	From 58 to 67 cm	51 kg	3	✔	Rear	✔	◐	●

** Stretcher advancement extension included.*

CROSS

ADJUSTABLE LOADING HEIGHT WITH RACK AND PINION SYSTEM

More info

Load capacity **170 KG**

CROSS stretcher is designed to offer excellent operability and durability in every emergency situation. Versatile and easily customizable, they feature a sturdy curved frame with multiple grip points for optimal use and can be inclined or adjusted into an intermediate level.
Materials: Al, Stainless steel, PE.

FIXATION SYSTEM REQUIRED

S-MAX PRO
10G fastener for stretchers.

The folding front trolley enhances operation in tight spaces or small-sized lifts.

- **MICRO SHOT-PEENED STAINLESS STEEL FRAME**
- **SHORTENABLE FRAME**
- **2 SWIVELLING WHEELS**
- **RACK AND PINION SYSTEM TO ADJUST LOADING HEIGHT**

CODE	CODE WITH MATTRESS INCLUDED	MODEL	DIMENSIONS	LOAD CAPACITY	LOADING HEIGHT	WEIGHT	HEIGHTS	BRAKES	FOWLER	FRAME COLOUR	BOARD COLOUR
CR72010-Z0	CR72010-D0	CROSS	197 x 56 cm	170 kg	From 58 to 67 cm	48 kg	3	Rear	–		
CR72020-Z0 CR72020-D1* CR72020-Z1*	CR72020-D0	CROSS	197 x 56 cm	170 kg	From 58 to 67 cm	48 kg	3	Rear	–		
CR72030 Z0	CR72030-D0	CROSS	197 x 56 cm	170 kg	From 58 to 67 cm	48 kg	3	Rear	✔		

** Stretcher advancement extension included.*

CROSS UP

MULTILEVEL STRETCHER WITH DETACHABLE STRETCHER

More info

Load capacity **250 KG**

Cross Up 8409 is a multilevel self-loading stretcher with detachable stretcher. The detachable stretcher can be used as a field stretcher for recovering casualties where normal stretchers. It can accommodate a spine board between stretcher and trolley to save space on the emergency vehicle.
Materials: Al, Stainless steel, PE.

- **DETACHABLE STRETCHER**
- **TELESCOPIC HANDLES**
- **TRENDELENBURG POSITION**

CROSS/CROSSOVER CHAIR

MULTILEVEL STRETCHER WITH DETACHABLE STRETCHER

Load capacity **170/250 KG**

More info

Crossover Chair gives emergency workers the option to transport patients in a sitting or lying down position by converting the stretcher into a chair. This feature helps moving patients in very confined spaces, like lifts or tight corridors.
Materials: Al, Stainless steel, PE.

- **CONVERTIBLE INTO CHAIR**
- **TRENDELENBURG POSITION**

FIXATION SYSTEM REQUIRED

R-MAX
10G fastener for stretchers

CODE	MODEL	DIMENSIONS	LOAD CAPACITY	LOADING HEIGHT	TOTAL WEIGHT	HEIGHTS	BRAKES	TWIST SYSTEM	FOWLER	FRAME COLOUR	BOARD COLOUR
CR00022*	CROSS UP 8409 with T stretcher	197 x 57 cm	250 kg	65 cm	52 kg	3	Rear	–	–	◐	●
CR00029	CROSS UP 8409 10G with T stretcher for B-BAK PIN	197 x 57 cm	250 kg	65 cm	52 kg	3	Rear	–	–	◐	●
CR00032	CROSS UP 8409 10G TWIST with TF stretcher for B-BAK PIN	197 x 57 cm	250 kg	65 cm	53 kg	3	Rear	–	✔	◐	●
CR00035	CROSS UP 8409 10G with TF stretcher for B-BAK PIN	197 x 57 cm	250 kg	65 cm	52 kg	3	Rear	–	✔	◐	●
CR00038	CROSS UP 8409 10G TWIST with T stretcher for B-BAK PIN	197 x 57 cm	250 kg	65 cm	53 kg	3	Rear	✔	–	◐	●
CR00085	CROSS CHAIR – 10G with stretcher/chair	197 x 57 cm	170 kg	65 cm	58 kg	3	Rear	–	–	◐	●
CR00086	CROSSOVER CHAIR with stretcher/chair	197 x 57 cm	250 kg	65 cm	58 kg	3	Rear	–	–	◐	●

**QMX777 mattress included.*

CARRERA TEC

LIGHTWEIGHT STRETCHER

CARRERA is a lightweight and essential entry-level stretcher that offers high standards of safety and durability at a very accessible price. The CARRERA TEC version is the standard configuration of this series.

Easy to accessorize, it is available in various models with different frame and board colours as well as:

- increased load capacity,
- Fowler position.

Materials: Al, Steel, PE.

- **EASY TO ACCESSORIZE**
- **2 SWIVELLING WHEELS**
- **REAR WHEELS WITH BRAKES**
- **TRENDELENBURG POSITION**

Load capacity **170/250 KG**

More info

FIXATION SYSTEM REQUIRED

S-MAX
10G fastener for stretchers.

CODE	MODEL	DIMENSIONS	LOAD CAPACITY	LOADING HEIGHT	WEIGHT	HEIGHTS	FRAME COLOUR	BOARD COLOUR
CA70027*	CARRERA T TEC 68	197 x 57 cm	170 kg	68 cm	38 kg	2	●	●
CA70051**	CARRERA T TEC Low	197 x 57 cm	170 kg	50 cm	38 kg	2	◐	●
CA70154*	CARRERA T TEC High	197 x 57 cm	170 kg	60 cm	38 kg	2	◐	●
CA61154	CARRERA T TEC High	197 x 57 cm	170 kg	60 cm	38 kg	2	●	●
CA60007	CARRERA T TEC Low	197 x 57 cm	170 kg	50 cm	38 kg	2	●	●
CA71154*	CARRERA T TEC High	197 x 57 cm	170 kg	60cm	38 kg	2	●	●
CA60029	CARRERA T TEC 63	197 x 57 cm	170 kg	63 cm	38 kg	2	◐	●
CA60154	CARRERA T TEC High	197 x 57 cm	170 kg	60 cm	38 kg	2	◐	●
CA71155	CARRERA TEC T 75	197 x 57 cm	170 kg	75 cm	38 kg	2	◐	●
CA70010	CARRERA T TEC 73	197 x 57 cm	170 kg	73 cm	38 kg	2	◐	●
CA50012**	CARRERA T TEC 73 MAX	197 x 57 cm	250 kg	73 cm	38 kg	2	◐	●
CA60025	CARRERA T TEC MAX High	197 x 57 cm	250 kg	60 cm	38 kg	2	◐	●
CA70022**	CARRERA T TEC 68 MAX	197 x 57 cm	250 kg	68 cm	38 kg	2	◐	●
CA70056-Z0	CARRERA TEC MAX 68	197 x 57 cm	170 kg	68 cm	38 kg	2	◐	●
CA71157	CARRERA TEC T 75 MAX	197 x 57 cm	250 kg	75 cm	38 kg	2	◐	●

**QMX776 mattress included. **QMX777 mattress included.*

CARRERA XL

CARRERA STRETCHER WITH INCREASED LOAD CAPACITY

More info

Load capacity **250 KG**

Enhanced version of the Carrera self-loading stretcher, offers intermediate height.
Materials: Al, Steel, PE.

CARRERA PRO

CARRERA STRETCHER WITH INTEGRATED SPINE BOARD HOUSING

Load capacity **170 KG**

This model features an integrated spine board compartment beneath the patient board for quick transport in emergencies, without extra hands or space compatible with B-Bak board.
Materials: Al, Steel, PE.

More info

FIXATION SYSTEM REQUIRED

S-MAX
10G fastener for stretchers.

CODE	MODEL	DIMENSIONS	LOAD CAPACITY	LOADING HEIGHT	WEIGHT	HEIGHTS	FOWLER	FRAME COLOUR	BOARD COLOUR
CA70003**	CARRERA TEC XL 68	197 x 57 cm	170 kg	68 cm	42 kg	3	–	◐	●
CA70035**	CARRERA T TEC XL 66	197 x 57 cm	170 kg	66 cm	38 kg	2	–	●	●
CA70040**	CARRERA TEC XL 60 MAX	197 x 57 cm	250 kg	60 cm	42 kg	3	–	◐	●
CA70030**	CARRERA XL T MAX 55	197 x 57 cm	250 kg	55 cm	42 kg	3	–	◐	●
CA70055**	CARRERA XL T TEC MAX	197 x 57 cm	250 kg	75 cm	42 kg	3	–	◐	●
CA70004*	CARRERA XL 68 TF	197 x 57 cm	170 kg	68 cm	38 kg	2	✔	●	●
CA50010**	CARRERA XL T TEC MAX	197 x 57 cm	250 kg	75 cm	42 kg	3	–	●	●
CA60000	CARRERA XL T TEC	197 x 57 cm	170 kg	75 cm	42 kg	3	–	●	●
CA60001	CARRERA XL 68 T/TEC	197 x 57 cm	170 kg	68 cm	42 kg	3	–	●	●
CA60003	CARRERA XL MAX 68 T/TEC	197 x 57 cm	250 kg	68 cm	42 kg	3	–	●	●
CA71151*	CARRERA T PRO High	197 x 57 cm	170 kg	60 cm	37 kg	2	–	◐	●
CA71152	CARRERA T PRO MAX High	197 x 57 cm	250 kg	60 cm	37 kg	2	–	◐	●
CA71153	CARRERA T PRO MAX 72 High	197 x 57 cm	250 kg	72 cm	37 kg	2	–	◐	●
CA60251	CARRERA PRO TF Low	197 x 57 cm	170 kg	50 cm	37 kg	2	✔	◐	●
CA61151	CARRERA T PRO High	197 x 57 cm	170 kg	60 cm	37 kg	2	–	◐	●

**QMX776 mattress included. **QMX777 mattress included.*

CROSS/CROSSOVER INCUBATOR

ROBUST TROLLEYS FOR INCUBATOR AND EMS EQUIPMENT TRANSPORT

More info

Load capacity **170 KG**

CROSS and CROSSOVER INCUBATOR models make infant transport in the incubator effective and safe. The trolley is equipped with universal incubator support rails compatible with various incubators model.
Materials: Stainless steel, PE e Al.

- **MICRO SHOT-PEENED STAINLESS STEEL FRAME**
- **10G CERTIFIED WITH S-MAX PRO FASTENING SYSTEM**
- **FOLDABLE TROLLEY**

FIXATION SYSTEM REQUIRED

S-MAX PRO
10G fastener for stretchers.

CARRERA INCUBATOR

ADJUSTABLE LOADING HEIGHT WITH RACK AND PINION SYSTEM

More info

Load capacity **150 KG**

CARRERA INCUBATOR is a self-loading trolley with a stainless steel frame for the efficient and safe transport of thermal cradle systems. The trolley is ecquipped with universal incubator support rails compatible with various incubators model.
Materials: Stainless steel, PE e Al.

- **10G CERTIFIED WITH S-MAX FIXING SYSTEM**
- **FOLDABLE TROLLEY**

FIXATION SYSTEM REQUIRED

S-MAX
10G fastener for stretchers.

CODE	MODEL	DIMENSIONS	LOAD CAPACITY	LOADING HEIGHT	TOTAL WEIGHT	HEIGHTS	SHORTENING FRAME	BRAKES	TWIST SYSTEM	FRAME COLOUR
CA00022	CARRERA INCUBATOR 68	197 x 57 cm	150 kg	68 cm	32 kg	2	–	Rear	–	
CA00023	CARRERA INCUBATOR 63 10G	197 x 57 cm	150 kg	63 cm	32 kg	2	–	Rear	–	
CA60021	CARRERA INCUBATOR 10G LOW	197 x 57 cm	150 kg	50 cm	32 kg	2	–	Rear	–	
CA60023	CARRERA INCUBATOR 10G HIGH	197 x 57 cm	150 kg	60 cm	32 kg	2	–	Rear	–	
CR60008-Z0	CROSSOVER INCUBATOR	197 x 56 cm	150 kg	From 58 to 67 cm	43,5 kg	3	✔	Rear	✔	
CR60009-Z0	CROSSOVER INCUBATOR LOW	197 x 56 cm	150 kg	From 47 to 55 cm	43,5 kg	3	✔	Rear	✔	
CR60010-Z0	CROSS INCUBATOR	197 x 56 cm	150 kg	From 58 to 67 cm	40,5 kg	3	✔	Rear	–	

S-MAX | S-MAX PRO

10G FASTENING SYSTEMS FOR STRETCHER

More info

Easy to install on ambulance floors and stretcher support systems, these devices act simultaneously both at the front and at the rear part of the stretcher. Recessed release system prevents the unintentional unlocking of the stretcher.
Materials: Al, Nylon, PE, Steel.

- **FLAT SILHOUETTE SHAPE**
- **ADVANCED ANCHORING SYSTEM**

S-MAX

S-MAX PRO

CODE	MODEL	DIMENSIONS	METAL PROFILE THICKNESS	WEIGHT
ST42720	S-MAX	179 x 19 x 8 cm	3 cm	5,2 kg
ST42707	S-MAX PRO	179 x 19 x 8 cm	3 cm	5,2 kg

Stretcher models	Fixation required
AGILE	S-MAX PRO
STAR-K	S-MAX PRO
CROSS	S-MAX PRO
CROSSOVER	S-MAX PRO
CROSS/CROSSOVER INCUBATOR	S-MAX PRO
CROSS UP	R-MAX
CROSSOVER CHAIR	R-MAX
CARRERA TEC	S-MAX
CARRERA XL	S-MAX
CARRERA PRO	S-MAX
CARRERA INCUBATOR	S-MAX

WHY CHOOSING KINETIX?

KINETIX lifts, lowers, and loads patients up to 300 kg with no physical effort, thanks to its hydro-pneumatic system—protecting operators from strain and injury. Powered by dual 24V lithium batteries, it ensures high efficiency, reduced consumption, and maximum reliability in any situation. It is versatile and easy to manoeuvre: the transport surface widens to accommodate bariatric patients, while the four swivel castors with brakes, telescopic handles and folding backrest allow the stretcher to be shortened in confined spaces such as lifts.

WHY CHOOSING THE AGILE?

AGILE adjusts easily, shortens for passage through tight spaces and optimises the work of caregivers, thanks to 6 variable heights and four swivel castors and Twist system. Assisted lowering makes height adjustment smoother and more controlled, while the micro-bead-blasted steel frame structure ensures maximum stability and a load capacity of up to 260 kg.

WHY CHOOSING THE STAR-K?

STAR-K multi-level, self-loading stretcher combines robust stainless steel construction with enhanced maneuverability. Its shortening frame and four swivel wheels make it ideal for tight spaces, while extendable handles and the Twist system ensure smooth handling. With a 260 kg load capacity, Trendelenburg and Fowler positions, and three loading height options, it offers versatility, durability, and ergonomic performance.

WHY CHOOSING THE CROSSOVER?

The Crossover stretcher offers a higher load capacity (250 kg), integrates the Twist system on the front wheels for superior maneuverability, and ensures optimal stability even in particularly challenging operating conditions.

WHY CHOOSING THE CROSS?

Choosing the CROSS stretcher means equipping yourself with a versatile, durable and adaptable tool that is ideal for working in complex operating conditions and in confined spaces.Its frame features an accentuated curvature that improves grip points and a folding structure at the front, facilitating use in confined spaces. Larger diameter wheels improve mobility on different types of terrain.

WHY CHOOSING THE CROSS UP 8409?

The detachable stretcher can be used as a field stretcher for recovering casualties where normal stretchers cannot reach thanks to the telescopic handles that provide a secure grip and facilitate patient lifting. CROSS UP 8409 is also available in model that can accommodate a spine board between stretcher and trolley to save space on the emergency vehicle.

WHY CHOOSING THE CROSS/CROSSOVER CHAIR?

CROSSOVER CHAIR gives emergency workers the option to transport patients in a sitting or lying down position by converting the stretcher into a chair. This feature helps moving patients in very confined spaces, like lifts or tight corridors. Available also in entry level version - Cross Chair - with 170 kg load capacity and 2 swiveling wheels.

WHY CHOOSING THE CARRERA?

CARRERA series are entry-level stretchers that combine lightweight design with reliable performance. Available with 170 kg or 250 kg load capacity, the XL and XL T-Tec versions offer customizable frame and mattress options.

WHY CHOOSING THE CARRERA PRO?

Choosing the CARRERA PRO stretcher means opting for a self-loading model designed for space-saving efficiency without sacrificing patient safety. It includes an integrated spinal board housing located beneath the patient board so you can transport a spine board quickly and without effort.

WHY CHOOSING THE CARRERA/CROSS/CROSSOVER INCUBATOR?

Incubator trolleys like CROSS, CROSSOVER, and CARRERA INCUBATOR are designed to ensure safe and efficient infant transport. They can accommodate essential devices such as lung ventilators, parameter monitors, and other emergency tools, providing a complete solution during neonatal transfers. Thanks to their robust steel frame, they guarantee outstanding strength and long-term durability, even in demanding conditions.

Spencer provides ambulance services a comprehensive selection of stretchers accessories to improve, customize and make patient transport tasks safer and more comfortable for both the patient and the EMS worker.

More info

TRACK 4
TELESCOPIC IV-POLE

CODE IF01047
CODE IF01044

END-T
INSTRUMENT SUPPORT TABLE FOR STRETCHERS

CODE EN90003

OXYPACK
OXYGEN TANK CARRIER FOR STRETCHERS

CODE CB09012 (2 L tank)
CODE CB09036 (5 L tank)

FIXO KID
PAEDIATRIC RESTRAINT SYSTEM

CODE ST00480

STX 90
TELESCOPIC ADJUSTABLE HEADREST

CODE ST00491 – STX 90
CODE QM50000 – ZEN ERGONOMIC PILLOW
CODE DR60550 – DRX 550 TNT ZEN PILLOWCASE

STX 702
TWO PIECE REFLEX METAL BELT

CODE ST70002 2 PCS.

DNA STRAP
BELT WITH INTEGRATED RE-WINDING MECHANISM

CODE ST00497 2 PCS.
CODE ST00498 – THORAX BELT 4 PCS.

DRX 556
GREEN DISPOSABLE TNT SHEET

CODE DR60556 · DRX 556
TNT SHEET 90x240 cm (10 PZ)

SPENCER 570
ACRYLIC BLANKET

CODE ST00642

DRX 555
TNT PILLOWCASE

CODE DR60555 · DRX 555 - TNT PILLOWCASE (10 PZ)

ROLL UP
FLEECE BLANKET

CODE ST00560

SPENCER 550
NYLON QUILTED BLANKET

CODE ST00550

STRETCHER SUPPORT SYSTEM

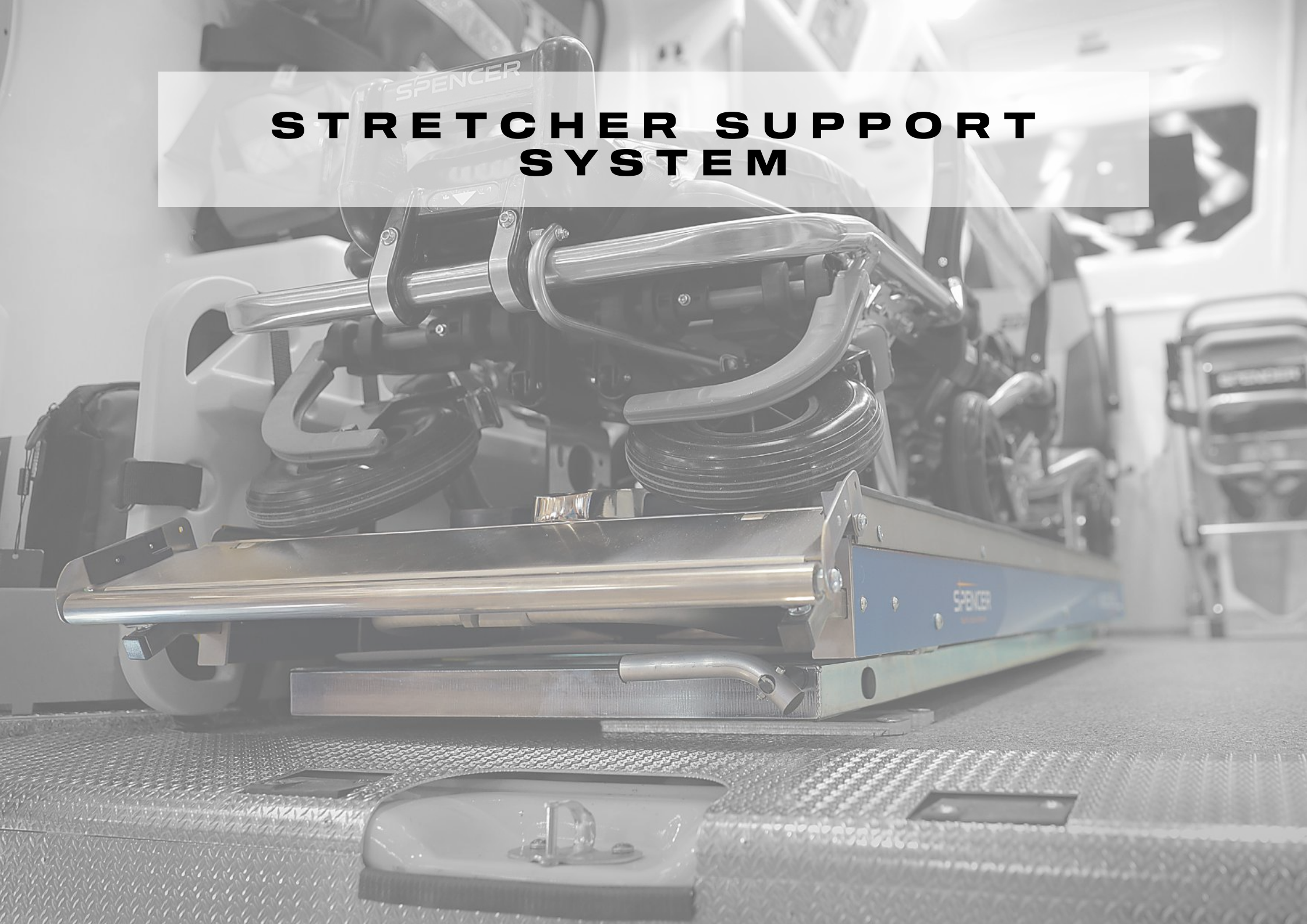

BOB GALAXY

INNOVATION AND SAFETY FOR QUICK AND SAFE OPERATIONS

More info

Load capacity **300 KG**

BOB GALAXY is a electric shock-absorbing stretcher support that can be pulled out, moved sideways, absorb shock and vibration, assume a backward and forward tilt position, and upgraded with patented accessories.

- **AUTOMATICALLY SUSPENSION AND HEIGHT**
- **SIDEWAYS MOVEMENT AND EXTRACTABLE**
- **SPACE-SAVING CONCAVE CURVATURE**
- **SHOCK AND VIBRATION ABSORPTION**
- **UPGRADEABLE WITH PATENTED ACCESSORIES**
- **TRENDELENBURG AND FOWLER POSITION**

ACCESSORIES

CODE	MODEL
BO10007	Height adjustment sensor
BO10100	RAMP 120 mm
BO10101	RAMP 180 mm
BO10102	RAMP 350 mm
BO10103	Electrical package
BO10104	RAMP 500 mm
BO10105	External control panel
BO10107	Basin for housing

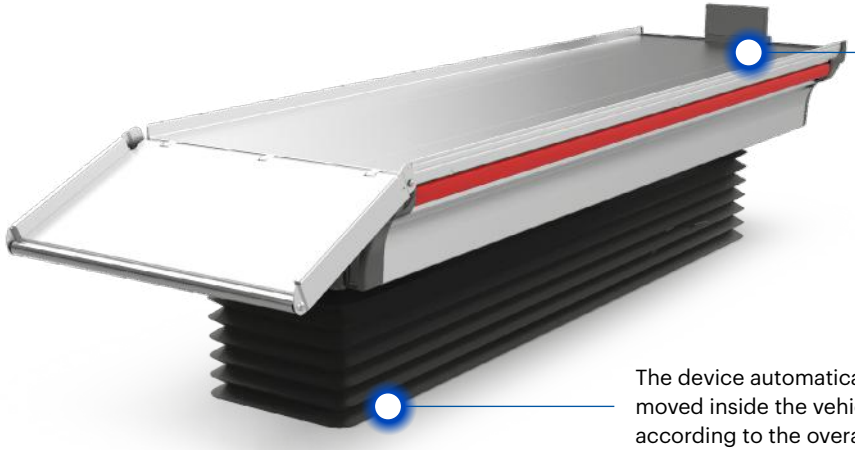

An intuitive control panel helps to control the device's height and activate the tilt front and tilt back position. Its location on the device can be pre-arranged.

The device automatically returns in the horizontal position once moved inside the vehicle. The suspension is automatically regulated according to the overall patient's and stretcher's weight.

10° Max.

15° Max.

CODE	MODEL	TYPE	MOVEMENTS	DIMENSIONS	LOAD CAPACITY	HEIGHTS	MATERIAL	WEIGHT	HOUSING	FRONT TILT	BACK TILT
BO10000	BOB-GALAXY Amortised power supply stretcher support	Electrical	Sideways movement, Extractable	201 x 60 cm	300 kg	37,5-58 cm	Al, Steel, PE, Nylon	110 kg	1	✔	✔

BOB MULTILEVEL 4

MAXIMUM VERSATILITY WITH 4-LEVEL ADJUSTMENT AND MINIMAL MAINTENANCE

More info

Load capacity **300 KG**

BOB Multilevel 4 is a mechanical multilevel stretcher stand with a non-deformable top structure, thanks to the surface treatment that ensures greater durability and reliability and impermeability to prevent stagnation inside.

- **SINGLE EXTRUDED ALUMINIUM BOARD**
- **STAINLESS STEEL RAMP**
- **4 ADJUSTABLE LEVELS**
- **TRANSLATION HANDLES**
- **SIDEWAYS MOVEMENT**
- **SINGLE OR DOUBLE HOUSING**

ACCESSORIES

CODE	MODEL
BO10100	120 mm RAMP FOR BOB
BO10101	180 mm RAMP FOR BOB

The seamless top design also protects internal components from fluid infiltration.

To adjust its overall height by simply regulating some of the 6 screws positioned on its side.

Depending on the model, 1 or 2 removable polyethylene trays, dedicated to housing immobilisation systems, such as spine board or spoon stretcher

DID YOU KNOW? BOB MULTILEVEL 4 offers 4 adjustable height settings without disassembly—just regulate 6 screws. It is therefore not necessary to dismantle the entire support or replace spare parts when, for any reason, you find yourself having to vary the loading height of the multi-level support. If each of the three BOB Multilevel 4 models were installed (versions without a platform, single platform, double platform), 12 different loading heights could be managed. It guarantees the safety and correct functioning of the stretcher: it can compensate for the lowering of the vehicle due to discharged shock absorbers.

CODE	MODEL	TYPE	MOVEMENTS	DIMENSIONS	LOAD CAPACITY	HEIGHTS	MATERIAL	WEIGHT	HOUSING	FRONT TILT	BACK TILT
BO10400	BOB MULTILEVEL4 Side-shift 1 compartment	Mechanical	Lateral	198 x 59 cm	300 kg	16,5/18/19,5/21 cm	Al, Steel, PE, Nylon	45,4 kg	1	✔	✔
BO10410	BOB MULTILEVEL4 Side-shift 2 compartments	Mechanical	Lateral	198 x 59 cm	300 kg	24,5/26/27,5/29 cm	Al, Steel, PE, Nylon	55,02 kg	2	✔	✔
BO10420	BOB MULTILEVEL4 Side-shift without compartment	Mechanical	Lateral	198 x 59 cm	300 kg	11.5/13/14.5/16 cm	Al, Steel, PE, Nylon	42,16 kg	0	✔	✔

BOB POWER

ELECTRIC STRETCHER SUPPORT THAT ENSURE EFFICIENT OPERATIONS

More info

Load capacity **300 KG**

- **BATTERY POWERED**
- **30 CM LATERAL MOVEMENT**
- **EXTRACTABLE**
- **ADJUSTMENTS VIA REMOTE CONTROL**
- **NON-DEFORMABLE STAINLESS STEEL TOP**

BOB POWER-00 and BOB POWER-01 are electric stretcher supports equipped with two actuators, which allow automatic positive (+10%) and negative (-15%) Trendelenburg, horizontal ascent and descent, automatic load position and other adjustments via remote control.

The 1,5-meter wired remote control provides convenient and intuitive control, while the easily accessible front controls simplify loading and unloading.

A 35 cm foldable stainless steel ramp included.

BOB POWER-01 model features a dedicated compartment for a pick-up stretcher or spine board.

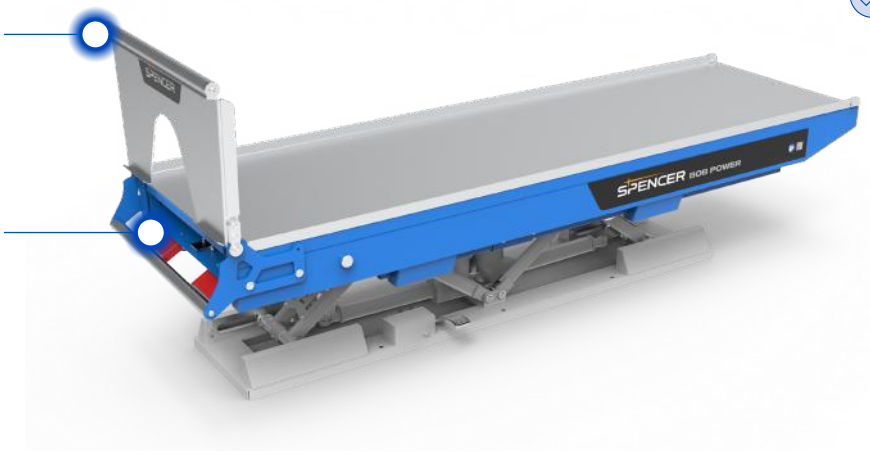

BOB TILT

MECHANICAL STRETCHER SUPPORT SIDEWAYS MOVEMENT WITH TRENDELENBURG

More info

Load capacity **300 KG**

BOB TILT-00 and BOB TILT-01 are mechanical supports for self-loading stretchers, offering high reliability, robustness and a side locking system for added safety.

- **30 CM LATERAL MOVEMENT**
- **NON-DEFORMABLE STAINLESS STEEL TRAY**
- **TRENDELENBURG POSITION**

A 35 cm foldable stainless steel ramp included.

BOB TILT-01 model features a dedicated compartment for a pick-up stretcher or spine board.

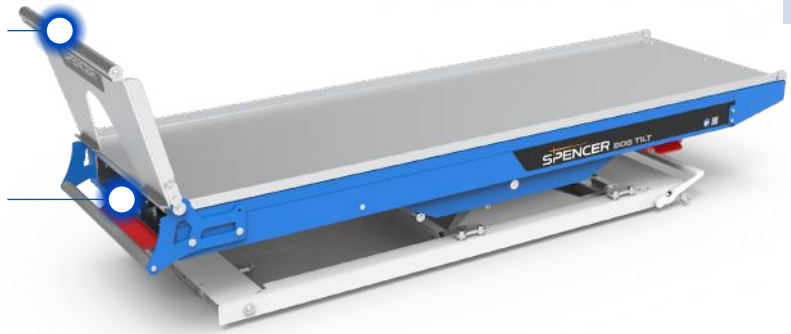

CODE	MODEL	TYPE	MOVEMENTS	DIMENSIONS	LOAD CAPACITY	MIN. HEIGHTS	MATERIAL	WEIGHT	HOUSING	FRONT TILT	BACK TILT
PB4601-00000S	BOB POWER-01 Electrical stretcher support with lateral displacement	Electrical	Lateral, Extractable	201 x 63 cm	300 kg	31 cm	Steel	105 kg	1	✔	✔
PB4602-00000S	BOB POWER-00 Electrical stretcher support with lateral displacement	Electrical	Lateral, Extractable	201 x 63 cm	300 kg	26 cm	Steel	82 kg	0	✔	✔
PB4105-00000S	BOB TILT-00 Manual stretcher support trendelenburg with lateral displacement	Mechanical	Lateral	200 x 63 cm	300 kg	29,5 cm	Steel	84 kg	0	✔	✔
PB4106-00000S	BOB TILT-01 Manual stretcher support trendelenburg with lateral displacement	Mechanical	Lateral	200 x 63 cm	300 kg	32,5 cm	Steel	84 kg	1	✔	✔

BOB FIXED

FIXED MECHANICAL STRETCHER SUPPORT

BOB FIXED-00, BOB FIXED-01 and BOB FIXED-02 are fixed mechanical supports for self-loading stretchers. Their essential structure and non-deformable stainless steel platform make these devices easy to install and maintain over time.

- **ESSENTIAL STRUCTURE AND SIMPLE OPERATION**
- **NON-DEFORMABLE STAINLESS STEEL TOP**

BOB FIXED-01 and BOB FIXED-02 models feature 1 and 2 dedicated compartments, respectively, for a pick-up stretcher or spine board.

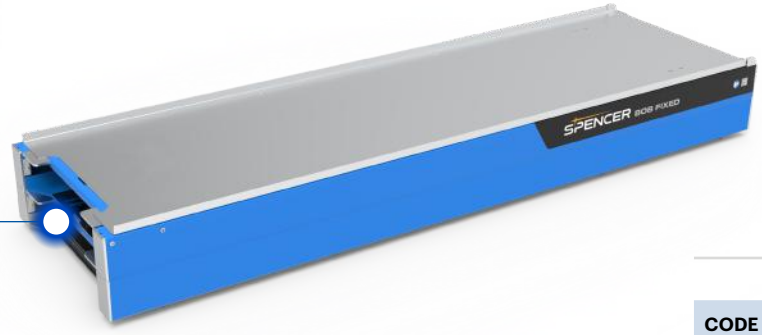

More info

Load capacity **380 KG**

ACCESSORIES

CODE	MODEL
PB4200-03072S	BOB RAMP 35 cm slide with roller
PB4200-03172S	BOB-RAMP 18 cm slide
PB4200-03310S	BOB RAMP 45 cm slide with roller
PB4205-03090S	BOB RAMP 82 cm slide

BOB SIDE

MECHANICAL SUPPORT FOR STRETCHERS WITH SIDE-SHIFT FUNCTION

BOB SIDE-01, BOB SIDE-02 and BOB SIDE-03 are mechanical supports for self-loading stretchers, equipped with lateral displacement via foot pedal.

- **30 CM LATERAL MOVEMENT**
- **ESSENTIAL STRUCTURE AND SIMPLE OPERATION**
- **NON-DEFORMABLE STAINLESS STEEL TOP**

More info

Load capacity **380 KG**

BOB SIDE-01 and BOB SIDE-02 models feature 1 and 2 dedicated compartments, respectively, for a pick-up stretcher or spine board.

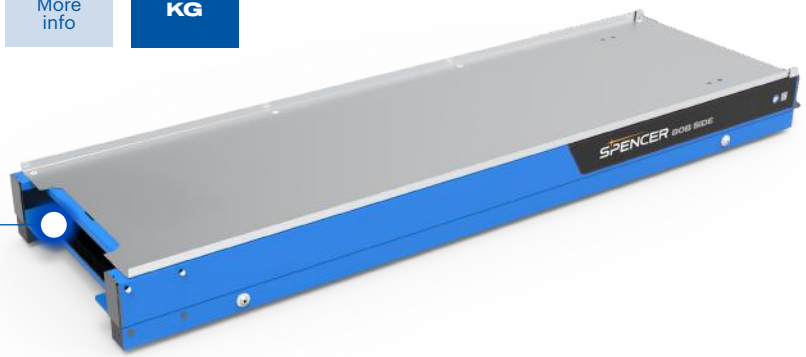

CODE	MODEL	TYPE	MOVEMENTS	DIMENSIONS	LOAD CAPACITY	HEIGHTS	MATERIAL	WEIGHT	HOUSING
PB4202-00000S	BOB FIXED-01 fixed stretcher support	Mechanical	N.A.	202,7 x 60 cm	380 kg	10 cm	Steel	41,5 kg	1
PB4203-00000S	BOB FIXED-00 fixed stretcher support	Mechanical	N.A.	198,5 x 60 cm	380 kg	5,5 cm	Steel	30 kg	0
PB4204-00000S	BOB FIXED-02 fixed stretcher support	Mechanical	N.A.	202,7 x 60 cm	380 kg	20 cm	Steel	60 kg	2
PB4200-00000S	BOB SIDE-01 Stretcher support with lateral displacement	Mechanical	Lateral	209 x 60 cm	380 kg	17 cm	Steel	45 kg	1
PB4201-00000S	BOB SIDE-00 Stretcher support with lateral displacement	Mechanical	Lateral	205 x 60 cm	380 kg	7 cm	Steel	40 kg	0
PB4206-00000S	BOB SIDE-02 Stretcher support with lateral displacement	Mechanical	Lateral	209 x 60 cm	380 kg	27 cm	Steel	60 kg	2

TRANSPORT AND STAIR CHAIRS

NEXTEP

BATTERY POWERED STAIR CHAIR

NEXTEP is a powered transport chair designed for patient stair climbing and evacuation. Its powered tracks help to carry people with mobility limitations in a controlled and safe way. Made of aluminium alloy with a black ABS seat and backrest.

More info

Load capacity **180 KG**

COMPATIBLE WITH

PA-579 Fastening system for PS196-PS197-PS198 chair

Intuitive and ergonomic control panel on the headrest, with led lights and a stop button to activate in case of need.

Extendable headrest adjusteable to the patient's height.

Restraint belts with metal buckle included.

Two foldable handles on the rear side to evacuate patients even in confined spaces.

Made in aluminium with black ABS seat and backrest.

Silent motor positioned under the seat.

Telescopic handles to coordinate stair climbing with the second operator.

Rubber wheels: 2 front swivelling and 2 rear with brake.

- **POWERED TRACKS**
- **INTUITIVE CONTROL PANEL**
- **2 PIVOTING WHEELS**
- **QUICK-FOLDING SYSTEM**
- **FOLDABLE ARMRESTS AND FOOTREST**
- **BATTERY POWERED**

CODE	MODEL	OPEN DIMENSIONS	FOLDED DIMENSIONS	LOAD CAPACITY	FRAME MATERIAL	WEIGHT	TELESCOPIC HANDLES	REAR HANDLES	BELTS	BRAKES	FOOTREST	FRAME COLOUR	ABS SEAT COLOUR
PS197	NEXTEP	110 x 50 x 160 cm	115 x 50 x 27 cm	180 kg	Aluminium	30 kg	✔	2	2	Rear	✔	●	●
PS198	NEXTEP	110 x 50 x 160 cm	115 x 50 x 27 cm	180 kg	Aluminium	30 kg	✔	2	2	Rear	✔	●	●

STANDARD EQUIPMENT INCLUDED: Restraint belts with metal buckle – External battery charger – Control panel with led lights.

BATTERY POWER SPECIFICATIONS INCLUDED: Battery voltage is 24V or 36V. – Battery charging time is 5-6 hours. Once fully charged, the battery can last 1,5 hours, which is equivalent to climbing up and down a 5-storey building 30 times. The battery can be charged 500 times. – The battery life is 3-5 years.

4BELL SILVER+

LIGHTWEIGHT STAIR CHAIR

4BELL SILVER+ is an EMS foldable stair chair designed to transport or evacuate patients with mobility limitations from multi-storey buildings. The frame of the chair is made in aluminum for increased resistance. Its total weight is 9,4 kg.

More info

Load capacity **180 KG**

- **FOLDABLE AND EASY TO STORE**
- **LIGHTWEIGHT AND DURABLE ALUMINIUM FRAME**
- **TELESCOPIC FRONT HANDLES**
- **PIVOTING FRONT WHEELS**
- **EXTENDABLE REAR HANDLES**

FASTENING SYSTEM

4BELL+ MAX

10G Fastening system for 4Bell+ chairs

4BELL STAIR+

COMPACT STAIR CHAIR WITH TRACKS

4BELL STAIR+ is a foldable EMS transport chair specifically designed for first responders to safely transfer or evacuate patients with limited mobility from multi-story buildings. Equipped with dual tracks, the chair allows for controlled descent down stairs, minimizing the need for lifting.

More info

Load capacity **180 KG**

- **LIGHTWEIGHT AND DURABLE ALUMINIUM FRAME**
- **FOLDABLE AND EASY TO STORE**
- **TELESCOPIC FRONT HANDLES**
- **PIVOTING FRONT WHEELS**
- **EXTENDABLE REAR HANDLES**

CODE	MODEL	OPEN DIMENSIONS	FOLDED DIMENSIONS	LOAD CAPACITY	FRAME MATERIAL	WEIGHT	TELESCOPIC HANDLES	ARMREST	REAR HANDLES	BELTS	BRAKES	FOOTREST	FRAME COLOUR	CANVAS COLOUR
ST10500-1	4BELL SILVER+	49 x 112 x 90,5 cm	49 x 90,5 x 29 cm	180 kg	Al, Steel, PU, PVC	9,4 kg	✔	✔	2	2	Rear	✔		
ST10500-2	4BELL SILVER+	49 x 112 x 90,5 cm	49 x 90,5 x 29 cm	180 kg	Al, Steel, PU, PVC	9,4 kg	✔	–	4	2	Rear	✔		
ST10500-3	4BELL SILVER+	49 x 112 x 90,5 cm	49 x 90,5 x 29 cm	180 kg	Al, Steel, PU, PVC	9,4 kg	✔	✔	2	2	Rear	✔		
ST10501-1	4BELL STAIR+	49 x 128 x 147,5 cm	49 x 94 x 29 cm	180 kg	Al, Steel, PU, PVC	14,7 kg	✔	✔	2	2	Rear	✔		
ST10501-2	4BELL STAIR+	49 x 128 x 147,5 cm	49 x 94 x 29 cm	180 kg	Al, Steel, PU, PVC	14,7 kg	✔	–	4	2	Rear	✔		
ST10501-3	4BELL STAIR+	49 x 128 x 147,5 cm	49 x 94 x 29 cm	180 kg	Al, Steel, PU, PVC	14,7 kg	✔	✔	2	2	Rear	✔		

COMPATIBLE WITH

4BELL+ MAX

10G Fastening system for 4Bell+ chairs

ACCESSORI

CODICE	MODELLO
ST10452	SEAT XL
ST10454	4BELL+ HEADREST

PS171

ALUMINIUM TRANSPORT AND EVACUATION CHAIR

More info

Load capacity **180 KG**

PS171 is a patient transport chair, made with a tubular aluminum structure. The seat cover is quilted, high resistance and easy to clean. The 4 foldable rear handles and the 2 front telescopic ones allow greater control and stability when descending stairs.
It is equipped with 4 wheels, two of which are fixed and two swivel with brakes, to ensure stability and mobility in any situation.

- **TELESCOPIC FRONT HANDLES**
- **4 REAR FOLDABLE HANDLES**
- **FOLDABLE FOOTREST**
- **3 BELTS INCLUDED**

PROFILE AND WELD CHAIRS

COMPACT TRANSPORT CHAIRS

Load capacity **180 KG**

More info

SPENCER PROFILE and SPENCER WELD chairs are foldable transport chairs with rear handles for the evacuation and transport of patient from the rescue place to the ambulance or to another device intended for transport on the vehicle.

To increase stability and patient comfort, they are also available in versions with telescopic handles, 2 pivoting front wheels, foldable front handles, foldable footrest and armrests.

- **FOLDABLE AND EASY TO STORE**
- **EASY TO CLEAN**
- **2 BELTS INCLUDED**

CODE	MODEL	OPEN DIMENSIONS	FOLDED DIMENSIONS	LOAD CAPACITY	FRAME MATERIAL	WEIGHT	TELESCOPIC HANDLES	REAR HANDLES	WHEELS	BRAKES	FOOTREST	FRAME COLOUR	SEAT COLOUR
PS171	PS171 Evacuation and transport chair aluminium	70 x 85 x 52 cm	20 x 54 x 90 cm	180 kg	Aluminium	11 kg	✔	4	4	Rear	✔	○	●
ST10425	SPENCER 425 Transport Chair	70 x 90 x 40 cm	70 x 90 x 21 cm	150 kg	Steel, Aliminium, PU, PVC	11 kg	✔	2	4	Front	✔	◐	●●
ST30450	SPENCER 450 Transport chair	50 x 92 x 61 cm	50 x 92 x 23,5 cm	180 kg	Steel, Aluminium, PU, PVC	14 kg	–	4	2	–	–	◐	●●
ST40455	SPENCER 455/B Transport chair	50 x 92 x 61 cm	50 x 92 x 25 cm	180 kg	Steel, Aluminium, PU, PVC	12,7 kg	✔	4	4	Front	✔	◐	●●
ST30455	SPENCER 455 Transport chair	50 x 92 x 61 cm	50 x 92 x 25 cm	180 kg	Steel, Aluminium, PU, PVC	12 kg	✔	4	4	Front	✔	◐	●●
ST36453	SPENCER 458 Transport chair	51 x 91 x 69 cm	51 x 91 x 26 cm	180 kg	Steel, Aluminium, PU, PVC	11,5 kg	✔	4	4	Rear	✔	◐	●●
ST36454	SPENCER 458/B Transport chair	51 x 91 x 69 cm	51 x 91 x 26 cm	180 kg	Steel, Aluminium, PU, PVC	12 kg	✔	4	4	Rear	✔	◐	●●

PS251 | PA260

EVACUATION CHAIR WITH ELECTRIC TRACK SYSTEM

PS251 is an evacuation chair designed for transporting patients, including bariatric patients. It can be easily converted into a motorized evacuation chair with an electric track system by quickly attaching or detaching the PA260 kit.

The lightweight and highly resistant tubular aluminium structure, the numerous grip points and the pivoting wheels make it particularly maneuverable even when overcoming obstacles or narrow spaces.

PA260 – electric track system – integrates an electric control panel strategically positioned in the grip area, which allows for easy management of evacuation movements.

More info

Load capacity **250 KG**

COMPATIBLE WITH

PA-577 10 G Fastening system for PS251 - PA-260 chair

Upper handrail to push the chair optimally during movement

Lockable rear handles

Telescopic front handles for improved transport

Easily sanitized ABS seat and backrest.

Advanced folding system

2 swivel and lockable front wheels

2 large diameter rear wheels, both with brakes

Advanced control panel located on the track system, in the operator's grip area

Large-surface anti-slip traction strips provide superior control and stability when descending stairs

High-brightness LEDs on both sides ensure safe passage in dimly lit environments

Compact motorization kit with roll-over wheels, it can be transported by a single person

- **TELESCOPIC FRONT HANDLES**
- **REAR FOLDABLE HANDLES**
- **ADJUSTABLE LEG AND CHEST BLETS INCLUDED**
- **ADVANCED FOLDING SYSTEM**
- **AVAILABLE WITH ELECTRIC TRACK SYSTEM**

CODE	MODEL	OPEN DIMENSIONS	FOLDED DIMENSIONS	LOAD CAPACITY	FRAME MATERIAL	WEIGHT	TELESCOPIC HANDLES	REAR HANDLES	WHEELS	BELTS	BRAKES	FOOTREST	FRAME COLOUR	SEAT COLOUR
PS251	PS251 Evacuation chair	52 x 70 x 102,5 cm	52 x 22,5 x 102,5 cm	250 kg	Aluminium	13 kg	✔	2	4	2	Rear	✔	○	●
PS251-PA260	PS251 Evacuation chair + PA260 Electric track system	52 x 70 x 102,5 cm	52 x 39,5 x 102,5 cm	250 kg	Aluminium	30 kg	✔	2	4	2	Rear	✔	○●	●

BATTERY POWER SPECIFICATIONS INCLUDED: Gearmotor power 24 V – Consumption 200 W – Battery type Lithium - 24 V – Max. autonomy 20 stairs of 20 steps.

IMMOBILIZATION AND RESCUE DEVICES

TANGO | BABY GO

2 SPINE BOARDS INTO A SINGLE DEVICE

More info

Load capacity **150 KG**

Load capacity **30 KG**

TANGO spine board is designed to lift and immobilize patients with suspected spinal injuries. With 2 spine boards into a single device, it optimises space and can be used to immobilize and transport two patients (one adult and one paediatric) at the same time.

- **DURABLE, HYGIENIC AND ANTI-LIQUID STAGNATION**
- **PRELIMINARY X-RAY TESTING COMPATIBLE**

The head immobilizer can be easily placed thanks to strap bands.

Rapid clip on/off system helps extracting the paediatric spine board from the adult one.

14 handles optimise usability and provide a great number of gripping points.

The option to add the MARK UP Spencer tag makes it easier to identify TANGO, especially in situations where multiple boards are in use.

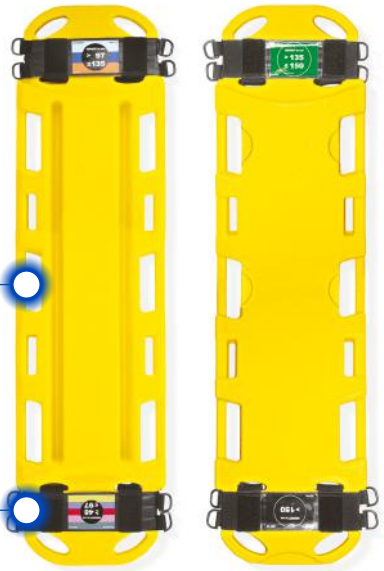

10 handholes provide enough gripping points for emergency workers.

BABY GO pediatric spine board is equipped with differentiated occipital areas to best adapt to the anatomical characteristics of pediatric patients.

FIXATION SYSTEMS

CODE	MODEL
ST02105	FIX BOARD 10G Spine board fixing
ST02108	FIX BOARD 10G Spine board fixing

ACCESSORI

CODICE	MODELLO
ST02106	MARK-UP Tagging system for personalization
ST02018	RSP Paediatric spider straps system
PAG. 46 **SPIDER STRAPS SYSTEM**	
PAG. 47-48 **HEAD IMMOBILIZERS**	

DID YOU KNOW? BABY GO paediatric spine board with 4 different immobilization positions, helps maintain the cervical curve in a neutral position with ideal alignment for airflow. Each of the four positions is easy to identify as it is highlighted with large numbers. RSP accessory, dedicated to the BABY GO spine board, is a pediatric spider belt that works not only as a restraint system, but also helps measure the height of the pediatric patient and immobilize him in the correct position.

CODE	MODEL	DIMENSIONS	LOAD CAPACITY	WEIGHT	HANDLES	MATERIAL
ST02140	TANGO Integrated paediatric and adult spine board	183 x 44,5 x 5,5 cm	150 kg	8 kg	14	Polyethylene
ST02141	BABY GO Paediatric spine board	119 x 32 x 4,5 cm	30 kg	3 kg	10	Polyethylene

B-BAK PIN

PRE-HOSPITAL SPINAL IMMOBILIZATION UP TO 454 KG LOAD CAPACITY

More info

Load capacity **UP TO 454 KG**

B-BAK PIN spine boards are designed to lift and immobilize patients with suspected spinal injuries.

- **MINIMAL STORAGE SPACE**
- **14 GRIPPING POINTS**
- **PRELIMINARY X-RAY TESTING COMPATIBLE**

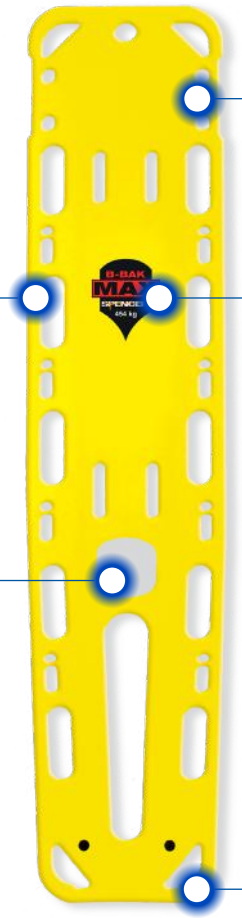

8 Moulded pins around the perimeter offer additional fixation points for spider straps.

14 handles optimise usability and provide a great number of gripping points.

B-BAK PIN MAX spinal board is able to lift 454 kg with only 6 kg of weight.

The option to add the MARK UP Spencer tag makes it easier to identify B-BAK PIN, especially in situations where multiple boards are in use.

Large oval space facilitate immobilization of the lower limbs without inferfering with the handles.

FIXATION SYSTEMS

CODE	MODEL
ST02105	FIX BOARD 10G Spine board fixing
ST02108	FIX BOARD 10G Spine board fixing

ACCESSORIES

CODE	MODEL
ST02102	SPINE PACK Empty spine board transport bag
ST02106	MARK UP Permanent personalization system

➜ PAG. 46 **SPIDER STRAPS SYSTEM**
➜ PAG. 47-48 **HEAD IMMOBILIZERS**

CODE	MODEL	DIMENSIONS	LOAD CAPACITY	WEIGHT	GRIPPING POINTS	MOLDED PINS	MATERIAL	COLOUR
ST02046	B-BAK PIN Spinal board with pin	184 x 40,5 x 4,5 cm	180 kg	6 kg	14	8	Polyethylene	
ST02047	B-BAK PIN MAX Spinal board with pin	184 x 40,5 x 4,5 cm	454 kg	6 kg	14	8	Polyethylene	
ST02061	B-BAK PIN Spinal board with pin	184 x 40,5 x 4,5 cm	180 kg	6 kg	14	8	Polyethylene	
ST02067	B-BAK PIN MAX Spinal board with pin	184 x 40,5 x 4,5 cm	454 kg	6 kg	14	8	Polyethylene	
ST02068	B-BAK PIN MAX Spinal board with pin	184 x 40,5 x 4,5 cm	454 kg	6 kg	14	8	Polyethylene	
ST02069	B-BAK PIN Spinal board with pin	184 x 40,5 x 4,5 cm	180 kg	6 kg	14	8	Polyethylene	

ROCK PIN

HIGH RESISTANCE AND WATERPROOFNESS

More info

Load capacity **UP TO 350 KG**

ROCK PIN spine boards are designed to lift and immobilize patients with suspected spinal injuries.

- **MINIMAL STORAGE SPACE**
- **16 GRIPPING POINTS**
- **PRELIMINARY X-RAY TESTING COMPATIBLE**

16 handles optimise usability and provide a great number of gripping points.

The option to add the MARK UP Spencer tag makes it easier to identify ROCK PIN, especially in situations where multiple boards are in use.

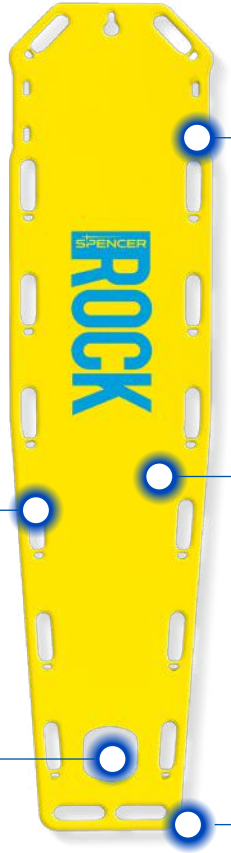

16 dedicated holes and pins to fix belts and spencer head immobilizers.

ROCK PIN MAX spinal board is able to lift 350 kg with only 6 kg of weight.

Large oval space facilitate immobilization of the lower limbs without inferfering with the handles.

FIXATION SYSTEMS

CODE	MODEL
ST02105	FIX BOARD 10G Spine board fixing
ST02108	FIX BOARD 10G Spine board fixing

ACCESSORIES

CODE	MODEL
ST02102	SPINE PACK Empty spine board transport bag
ST02106	MARK UP Permanent personalization system

➜ PAG. 46 **SPIDER STRAPS SYSTEM**
➜ PAG. 47-48 **HEAD IMMOBILIZERS**

CODE	MODEL	DIMENSIONS	LOAD CAPACITY	WEIGHT	GRIPPING POINTS	MOLDED PINS	MATERIAL	COLOUR
ST02010	ROCK PIN Spinal board with pin	184 x 44,5 x 5 cm	170 kg	6,7 kg	16	14	Polyethylene	
ST02012	ROCK PIN Spinal board with pin	184 x 44,5 x 5 cm	170 kg	6,7 kg	16	14	Polyethylene	
ST02013	ROCK PIN Spinal board with pin	184 x 44,5 x 5 cm	170 kg	6,7 kg	16	14	Polyethylene	
ST02014	ROCK PIN Spinal board with pin	184 x 44,5 x 5 cm	170 kg	6,7 kg	16	14	Polyethylene	
ST02110	ROCK PIN MAX Spinal board with pin	184 x 44,5 x 5 cm	350 kg	6,7 kg	16	14	Polyethylene	
ST02112	ROCK PIN MAX Spinal board with pin	184 x 44,5 x 5 cm	350 kg	6,7 kg	16	14	Polyethylene	
ST02113	ROCK PIN MAX Spinal board with pin	184 x 44,5 x 5 cm	350 kg	6,7 kg	16	14	Polyethylene	
ST02114	ROCK PIN MAX Spinal board with pin	184 x 44,5 x 5 cm	350 kg	6,7 kg	16	14	Polyethylene	

Full-body immobilization devices designed to securely fasten patients to spine boards or rescue stretchers during emergency transport. Typically featuring 10–12 Velcro® straps arranged in a radial “spider web” pattern, they provide effective spinal stabilization and help maintain neutral alignment in trauma cases. Made from durable, easy-to-clean materials, they include adjustable, color-coded straps for quick application and are fully compatible with X-ray imaging.

More info

PIN STRAPS

SPIDER STRAPS SYSTEM WITH CARABINERS FOR SPINE BOARDS

CODE ST02015

ROCK STRAPS

UNIVERSAL SPIDER STRAPS SYSTEM FOR SPINE BOARDS

CODE ST02035

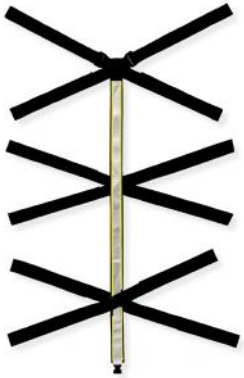

ECS-STRAPS

ADULT/CHILDREN SPIDER STRAPS SYSTEMS FOR SPINE BOARDS

CODE ST02022

RSP

PAEDIATRIC SPIDER STRAPS SYSTEM FOR BABY GO

CODE ST02018

T-STRAPS

UNIVERSAL SPIDER STRAPS SYSTEM FOR SPINE BOARDS

CODE ST02039

REFLEX STRAPS

REFLECTIVE UNIVERSAL SPIDER STRAPS SYSTEM FOR SPINE BOARDS

CODE ST02020

SPENCER CONTOUR

More info

ANATOMIC UNIVERSAL HEAD IMMOBILIZER

CONTOUR's shape has been designed to support the brain case and minimize the compression of the cranium. The base comes with two belts to harness the device to any stretcher. The head strap adapts to the patient's forehead, while hook-and-loop padding at the base ensures rapid immobilisation.

CONTOUR HP features an advanced rigid base for fixing the spine board and two straps with a carabiner hook for securing the patient.

- **ADULT OR PAEDIATRIC USE**
- **COMFORT SOFT CUSHIONS**
- **EASY SANITATION**
- **Ø 7 CM EAR INSPECTION HOLE**

SUPER | SUPER SX

More info

COMPACT UNIVERSAL HEAD IMMOBILIZER

The adaptability to the patient's head is ensured by a small air cushion integrated in the support's core. It is made of high density foam to provide durability and waterproofness.
The head immobilisation straps are made of polypropylene and are padded at the part in contact with the patient's face. The base is reinforced in the areas most exposed to use.

SUPER HP features ???
SUPER SX, specifically for the spoon stretcher, features a two-piece padded base that allows it to remain in position during application.

- **Ø 7 CM EAR INSPECTION HOLE**
- **EASY SANITATION**

CODE	MODEL	PILLOW DIMENSIONS	BASE DIMENSION	PILLOW WEIGHT	BASE WEIGHT	TOTAL WEIGHT	MATERIAL	COLOUR
SH00201	SPENCER CONTOUR Anatomical head immobilizer	23,5 x 13 x 16 cm	39 x 26 x 1,5 cm	430 g	360 g	1,46 kg	PU, Nylon, PVC	Yellow
SH00203	SPENCER CONTOUR HP Anatomical head immobilizer	23,5 x 13 x 16 cm	44,5 x 28 x 1,5 cm	430 g	700 g	1,56 kg	PU, Nylon, PVC	Yellow
SH00110	SUPER BLUE Compact head immobilizer	25,5 x 8,5 x 16 cm	36,5 x 26 x 2 cm	500 g	360 g	1,46 kg	PE, PVC, Nylon	Blue
SH00111	SUPER BLUE Compact head immobilizer	25,5 x 8,5 x 16 cm	36,5 x 26 x 2 cm	500 g	360 g	1,46 kg	PE, PVC, Nylon	Yellow
SH00162	SUPER BLUE HP Compact head immobilizer	25,5 x 8,5 x 16 cm	44,5 x 28 x 1,5 cm	500 g	430 g	1,56 kg	PE, PVC, Nylon	Blue
SH00163	SUPER YELLOW HP Universal head immobilizer	25,5 x 8,5 x 16 cm	44,5 x 28 x 1,5 cm	500 g	430 g	1,56 kg	PE, PVC, Nylon	Yellow
SH00500	SUPER SX Head immobilizer for pick-up stretcher	25,5 x 8,5 x 16 cm	20 x 19 x 2 cm (half)	500 g	360 g	1,46 kg	PE, PVC, Nylon	Yellow

TANGO FIX SYSTEM

INTEGRATED ADULT-PAEDIATRIC HEAD IMMOBILIZER

More info

TANGO FIX combines both an adult and a paediatric adjustable head immobiliser in a single, versatile device. The PEDI FIX configuration ensures optimal head immobilisation for paediatric trauma patients by pairing the dedicated PEDI GO cushion with the TANGO FIX system.

TANGO FIX HP is characterized by an advanced rigid base for spine board fixation and two straps with carabineer hook for patient fixation.

- **OPENINGS FOR INSPECTION OF THE EAR**
- **COMFORT SOFT CUSHIONS**
- **ADULT OR PAEDIATRIC USE**
- **EASY SANITATION**

FXA PRO

ANATOMIC UNIVERSAL ANKLE IMMOBILIZER

More info

Thanks to its innovative design, FXA PRO robust material and its fixation system can be used effectively on spine boards and also on other types of stretchers. Made of injection-moulded plastic compound, with an excellent elastic memory, helps to achieve correct alignment of the patient on the stretcher, reducing accidental movements of the lower limbs.

Single strap provides ankle immobilization as well as harness to the transport device.

The wrap-around shape of the support area increases patient comfort.

DID YOU KNOW? Spencer head and ankle immobilizers are specifically designed to ensure rapid and safe immobilization of patients onto spine boards and pick-up stretchers? All our models are lightweight, waterproof, and easy to clean, and they feature excellent elastic memory to better absorb accidental impacts and protect the patient. The head strap conforms to the shape of the forehead, while the hook-and-loop base padding allows for quick and secure stabilization.

CODE	MODEL	PILLOW DIMENSIONS	BASE DIMENSION	PILLOW WEIGHT	BASE WEIGHT	TOTAL WEIGHT	MATERIAL	COLOUR
SH00240	TANGO FIX Adult-paediatric head immobilizer	38 x 26,5 x 18 cm	36,5 x 26 x 2 cm	1,06 kg	450 g	2,08 kg	PE, Nylon, TPU	●●
SH00246	TANGO FIX HP Adult-paediatric head immobilizer	38 x 26,5 x 18 cm	44,5 x 28 x 1,5 cm	1,06 kg	700 g	2,32 kg	PE, Nylon, TPU	●●
SH00260	PEDI FIX Paediatric head immobilizer	19 x 7 x 12 cm	44,5 x 28 x 1,5 cm	560 g	430 g	1,56 kg	PE, Nylon, TPU	●●
SH00151	FXA PRO Universal anatomical ankle immobilizer	–	29 x 16 x 8 cm	–	350 g	–	PE, Nylon	●●

Cervical collars are designed to help maintain neutral alignment of the cervical spine during immobilization and to prevent secondary spinal cord injuries in trauma patients. They are available in various models, including one-piece, bivalve, and multi-size kits.

ONE-PIECE CERVICAL COLLAR

The one-piece cervical collar is a medical device designed to safely and stably immobilise the cervical spine in patients with suspected spinal injuries. Made of rigid materials such as high-density polyethylene, it anatomically wraps around the occipital and mandibular area, minimising flexion, extension and rotation movements of the neck. Its one-piece construction is characterised by a single hook-and-loop fastener, which facilitates its quick application, making it ideal for emergency interventions and first aid situations.

In addition, compatibility with diagnostic examinations such as X-rays, CT scans and MRI scans allows continuous patient monitoring without the need to remove the collar. These devices are easily sanitised with standard disinfectants, reducing the risk of cross-contamination and maintaining safety protocols even in critical situations.

TWO-PIECE CERVICAL COLLAR

The bivalve cervical collar is a medical device consisting of two separate parts, anterior and posterior, allowing a more even distribution of support and reducing flexion, extension and rotation movements of the neck. The bivalve structure facilitates adaptation to different patient anatomies and allows application even under complex conditions, such as during extrication manoeuvres.

It is based on the physical principle in which the physical force that the operator applies to the device is transferred to the vertical components of the collar when placing it around the patient's neck. By applying this technique, neutral alignment is achieved and the possibility of error is limited.

The bivalve cervical collar has adjustable hook-and-loop fasteners for a secure and quick fit and is compatible with preliminary diagnostic examinations (X-rays, CT scans, MRI scans), making it ideal for use in pre-hospital, emergency and first aid settings.

MULTI-SIZE KIT WITH COLOR CODE

Multi-size kits feature colour-coded sizes, allowing for faster and more intuitive application. it is indicated in the table refer to the rigid parts that make up the valves. The dimensions of the pads are only partly taken into account.

- **STRAPS CLOSURE**
- **PRELIMINARY X-RAY TESTING COMPATIBLE**

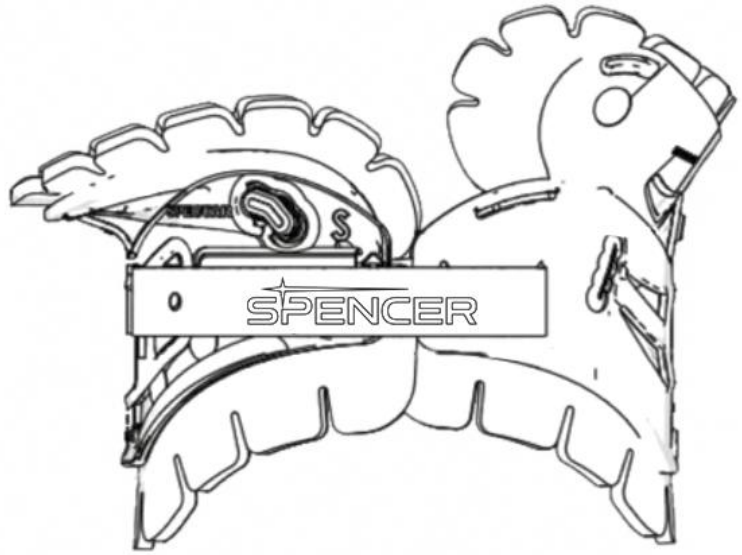

ACCESSORIES

CODE	MODEL	DIMENSION	MATERIAL
JM00500	SPENCER COLLAR BAG – Black nylon bag with compartments	42 x 33 cm	Nylon
QC19010	COLLAR BAG 1 – Single-valve collar bag	75 x 25 cm	Nylon
QC10120	COLLAR BAG 3 – Divider bag for single-valve collars	61 x 28 cm	Nylon

NEC UP

MULTI-SIZE MONOVALVE CERVICAL COLLAR (PAEDIATRIC AND ADULT)

More info

NEC UP cervical collar is designed to help maintain neutral alignment of the cervical spine, reducing the risk of paralysis and further spinal injury in trauma patients during transport. The monovalve design is available in two versions, for adults and paediatric patients, and is fully adjustable to fit a range of sizes, ensuring a secure and comfortable fit for all patients. Constructed from rigid polyethylene with PE foam padding, the NEC UP collar provides both stability and comfort, and can be easily washed and disinfected.

- **TRACHEOTOMY HOLE AND NUCHAL SECTION OPENING**
- **FRONT RED MARKING FOR QUICK SIZE IDENTIFICATION**
- **QUICK AND EASY TO APPLY**

SPECTAR KIT

MULTI-PURPOSE BIVALVE CERVICAL COLLAR KIT (6 SIZES)

More info

The collars in this kit are unique: shaped to support the head, adjustable with the fingers, and made of a material that minimizes carotid pressure. The kit includes 6 collars in different sizes (Infant, Paediatric, Small, Medium, Stout, Large).

- **OPENING FOR CAROTID PULSE CONTROL**
- **TRACHEOTOMY ACCESS**
- **COMFORTABLE CONTOURED PADDING**
- **TRANSPORT BAG INCLUDED**

CODE	MODEL	TRANSPORT BAG INCLUDED	SIZE	WEIGHT	MATERIAL	COLOUR
QC19101	NEC UP Paediatric multi-size cervical collar	–	Infant h.6 cm – Pedi h.7 cm – Petite h.8 cm	85 g	PE	○ ●
QC19100	NEC UP Adult multi-size cervical collar	–	Low h.10,5 cm – Short h.11,5 cm – Regular h.12,5 cm – Tall h.13,5 cm	120 g	PE	○ ●
JM30020	SPECTAR FOAM Bivalve cervical collar	–	XS	115 g	LDPE, PE	●
JM30021	SPECTAR FOAM Bivalve cervical collar	–	S	190 g	LDPE, PE	●
JM30022	SPECTAR FOAM Bivalve cervical collar	–	M	180 g	LDPE, PE	●
JM30023	SPECTAR FOAM Bivalve cervical collar	–	L	205 g	LDPE, PE	●
JM30024	SPECTAR FOAM Bivalve cervical collar	–	STOUT	185 g	LDPE, PE	●
JM30025	SPECTAR FOAM Bivalve cervical collar	–	XXS	120 g	LDPE, PE	●
JM30026	SPECTAR FOAM Cervical collars Kit 6	✔	XXS – XS – S – M – L – STOUT	1,25 kg	LDPE, PE	Assorted
JM30029	SPECTAR FOAM Cervical collars Kit 3	✔	S – M – L	650 g	LDPE, PE	Assorted
JM30030	SPECTAR FOAM Cervical collars Kit 4	✔	XS – S – M – L	790 g	LDPE, PE	Assorted

YES

BIVALVE CERVICAL COLLAR KIT (4 SIZES)

More info

YES collars are realized in thermo-pressed, bio-compatible, closed-cell polyethylene, which guarantees excellent efficiency and reduces the inflection-extension to the minimum, minimizes pressure on the carotid. It includes 4 collars of sizes XS – S – M – L.

NEC LOC

BIVALVE RIGID CERVICAL COLLAR KIT (6 SIZES)

More info

NEC LOC is a bivalve rigid cervical collar for adult and paediatric patients with different neck circumference. This kit includes Size 2 (2-6 years), Size 4 (Paediatric), Size 5 (Stout), Size 6 (Small), Size 7 (Medium) and Size 8 (Large).

- **TRACHEOTOMY ACCESS**
- **COMFORTABLE CONTOURED PADDING**
- **TRANSPORT BAG INCLUDED**

DID YOU KNOW? Comfort is a key factor in ensuring patient tolerability and cooperation, particularly in more sensitive cases such as pediatric patients, individuals with claustrophobia, or those with respiratory difficulties. The use of thermoformable materials, breathable padding, and ergonomic designs contributes to effective immobilization without compromising patient well-being. In pediatric models, these features are combined with shapes and proportions specifically tailored to children's anatomy, providing safe and comfortable support even for the most delicate patients.

CODE	MODEL	SIZE	TRANSPORT BAG INCLUDED	WEIGHT	MATERIAL	COLOUR
QC30100	YES Bivalve cervical collar	XS	–	–	Expanded PE, Nylon	Yellow
QC30101	YES Bivalve cervical collar	S	–	–	Expanded PE, Nylon	Yellow
QC30102	YES Bivalve cervical collar	M	–	–	Expanded PE, Nylon	Yellow
QC30103	YES Bivalve cervical collar	L	–	–	Expanded PE, Nylon	Yellow
QC30104	YES - Collar Kit 4 sizes	XS - S - M - L	✔	545 g	Expanded PE, Nylon	Yellow
JM10007	NEC LOC Bivalve cervical collar	Size 1 (0-2 years)	–	115 g	PE/Plastizote	Grey
JM10008	NEC LOC Bivalve cervical collar	Size 2 (2-6 years)	–	140 g	PE/Plastizote	Grey
JM10009	NEC LOC Bivalve cervical collar	Size 3 (6-12 years)	–	170 g	PE/Plastizote	Grey
JM10021	NEC LOC Bivalve cervical collar	Size 4 (Paediatric)	–	125 g	PE/Plastizote	Green
JM10030	NEC LOC Bivalve cervical collar	Size 5 (Stout)	–	–	PE/Plastizote	Blue
JM10040	NEC LOC Bivalve cervical collar	Size 6 (Small)	–	180 g	PE/Plastizote	Yellow
JM10050	NEC LOC Bivalve cervical collar	Size 7 (Medium)	–	200 g	PE/Plastizote	Orange
JM10060	NEC LOC Bivalve cervical collar	Size 8 (Large)	–	–	PE/Plastizote	Light blue
JM10100	NEC LOC Cervical collars KIt 3 with bag	Size 4-6-7	✔	610 g	PE/Plastizote	Assorted
JM10101	NEC LOC Cervical collars Kit 6 with bag	Size 2-4-5-6-7-8	✔	–	PE/Plastizote	Assorted

NEC YORK

MONOVALVE CERVICAL COLLAR KIT (5 SIZES/6 PIECES)

More info

NEC YORK is a one-piece cervical collar to be used to help maintain neutral alignment of the cervical spine. It includes 6 colour-coded collars of 5 different sizes: Infant, Paediatric, Neckless, Short (2 pieces) and Regular.

DALLAS

SEMI-RIGID ONE-PIECE CERVICAL COLLAR KIT (5 SIZES)

More info

DALLAS collar is made entirely of closed cross-cell polyethylene foam which is flexible and has an easily washable surface. Thanks to its particular anatomical shape, it adapts perfectly to the form of the patients neck, giving support to the cervical vertebrae and making the positioning of the head easier and more comfortable. Available in 5 colour-coded sizes: XS, S, M, L, XL.

CODE	MODEL	SIZE	TRANSPORT BAG INCLUDED	WEIGHT	MATERIAL	COLOUR
QC19001	NEC YORK Cervical collar Size 1	Infant	–	85 g	PE	
QC19002	NEC YORK Cervical collar Size 2	Paediatric	–	100 g	PE	
QC19020	NEC YORK Cervical collar Size 3	Neckless	–	120 g	PE	
QC19021	NEC YORK Cervical collar Size 4	Short	–	110 g	PE	
QC19022	NEC YORK Cervical collar Size 5	Regular	–	130 g	PE	
QC19024	NEC YORK Cervical collar Size 6	Large	–	120 g	PE	
QC19013	NEC YORK Cervical collars Kit 3 Sizes	Paediatric, Neckless, Regular	✔	430 g	PE, PA	–
QC19015	NEC YORK Cervical collars Kit 6 pieces	Infant, Paediatric, Neckless, 2x Short, Regular	✔	760 g	PE, PA	–
QC19025	NEC YORK Cervical collars Kit 6 pieces	4 Adult, 2 Paediatric	✔	–	PE, PA	–
QC22301	DALLAS Monovalve cervical collar	XS	–	16 g	Expanded PE	–
QC22302	DALLAS Monovalve cervical collar	S	–	13 g	Expanded PE	–
QC22303	DALLAS Monovalve cervical collar	M	–	18 g	Expanded PE	–
QC22304	DALLAS Monovalve cervical collar	L	–	17 g	Expanded PE	–
QC22305	DALLAS Monovalve cervical collar	XL	–	33 g	Expanded PE	–
QC22350	DALLAS Cervical collars Kit 3 Sizes	S – M – L	–	100 g	Expanded PE	–
QC22370	DALLAS Cervical collars Kit 5 Size	XS – S – M – L – XL	–	200 g	Expanded PE	–

PAX MUMMY-MAT

OVERSIZED "V" SHAPE VACUUM MATTRESS WITH INTEGRATED HANDLES

Load capacity **150 KG**

More info

Thanks to its design, PAX MUMMY-MAT is a vacuum mattress that ensures optimal patient fixation. Comfort and hygiene are ensured by the fully enclosed design of the strap loops and carrying handles.

- **COLOR-CODED, EASY TO CLEAN REPLACEABLE BELTS**
- **TWO LAYERS OF EPS BEADS**
- **COMPLIANT WITH EN 1865-1**

10 carrying handles or integrated handlebar

Multi-chamber mattress system with 2-layer construction.

PAX I-MAT

VACUUM MATTRESS WITH A 'I' SHAPE WITH HANDLES

Load capacity **150 KG**

More info

PAX I-MAT is a standard vacuum mattress without section or head support, characterised by a straight cut resembling an 'I' suitable for the immobilisation of patients in an emergency. Comfort and hygiene are ensured by the fully enclosed design of the strap loops and carrying handles.

- **TWO LAYERS OF EPS BEADS**
- **8 ERGONOMIC COLOR-CODED HANDLES**
- **COMPLIANT WITH EN 1865-1**

Multi-chamber mattress system with 2-layer construction.

Equipped with several carrying handles and 5 colour-coded restraint straps.

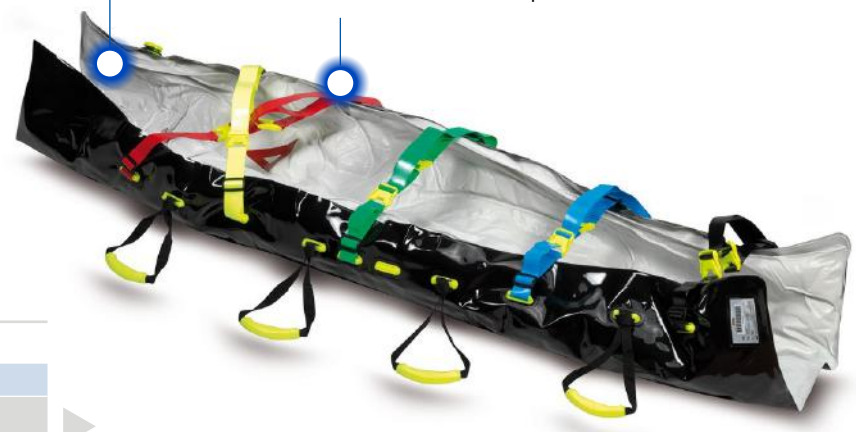

ACCESSORIES

CODE	MODEL
157470410	PAX Vacuum mattress carrying bag
270890003	PAX Vacuum Pump – Handle
273130003	PAX Vacuum Pump – Foot

CODE	MODEL	CARRYING BAG INCLUDED	DIMENSIONS	LOAD CAPACITY	HANDLES	WEIGHT	MATERIAL	COLOUR
155145210	PAX MUMMY-MAT – Vacuum mattress with integrated handles	✔	202 x 96 cm	150 kg	10	4,7 kg	PAX-Flex Tec MP / PAX-Tec+	
155155210	PAX MUMMY-MAT – Vacuum mattress with external handles	✔	202 x 96 cm	150 kg	10	4,7 kg	PAX-Flex Tec MP / PAX-Tec+	
155165210	PAX I-MAT – Vacuum mattress with external handles	✔	202 x 80 cm	150 kg	10	4,23 kg	PAX-Flex Tec MP / PAX-Tec+	

PAX ERGO-MAT

VACUUM MATTRESS WITH INTEGRATED HANDLES AND HEAD SUPPORT

Capacità di carico **150 KG**

More info

PAX ERGO-MAT is a vacuum mattress with an anatomical V-shape and a specially designed head section to allow the use of restraining straps on ambulance stretchers. Comfort and hygiene are ensured by the fully enclosed design of the strap loops and carrying handles.

Head section supports the head during transport to avoid hyperflexion of the neck area.

10 carrying handles or integrated handlebar

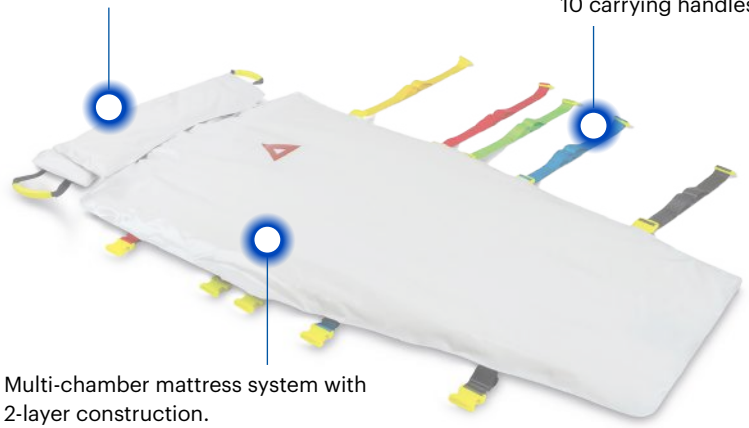

Multi-chamber mattress system with 2-layer construction.

- **COLOR-CODED, EASY TO CLEAN REPLACEABLE BELTS**
- **TWO LAYERS OF EPS BEADS**
- **COMPLIANT WITH EN 1865-1**
- **CARRYING BAG INCLUDED**

ACCESSORIES

CODE	MODEL
157470410	PAX Vacuum mattress carrying bag
270890003	PAX Vacuum Pump – Handle
273130003	PAX Vacuum Pump – Foot

CODE	MODEL	DIMENSIONS	LOAD CAPACITY	HANDLES	WEIGHT	MATERIAL	COL.
162415210	PAX ERGO-MAT	202 x 97 cm	150 kg	10	5,3 kg	PAX-Flex Tec MP / PAX-Tec+	○ ●

Vacuum splints are medical devices used to quickly and effectively immobilise extremities in case of injury, providing easy application and precise shaping to the limb, offering support and protection from further damage, and facilitating safe and uninterrupted transport. In fact, by fixing the splints and then applying vacuum, they mould themselves three-dimensionally, adapting to the patient. All X-ray compatible and suitable for paediatric and adult patients.

More info

PAX VACUUM SPLINTS SET

More info

IMMOBILIZATION SYSTEM: ELBOW – LEG – FOREARM SPLINT

PAX VACUUM SPLINTS are medical devices used for optimal immobilisation of extremities in the case of injuries: by closing the buckles of the fixation straps and then applying vacuum, the splint moulds itself three-dimensionally and adapts to the patient. They are available in three different sizes with anatomical design, depending on the area to be immobilised.

- **ANATOMICAL DESIGN**
- **FASTENING WITH STRAPS**
- **SOFT AND EASY TO CLEAN MATERIAL**
- **CARRYING BAG INCLUDED**

PAX VACUUM SPLINTS SET REC

More info

IMMOBILIZATION SYSTEM: JOINT – LEG – ARM SPLINT

PAX VACUUM SPLINTS REC are medical devices used for optimal immobilisation of extremities in the case of injuries: by closing the buckles of the fixation straps and then applying vacuum, the splint moulds itself three-dimensionally and adapts to the patient. They available in three different sizes depending on the area to be immobilised.

- **FASTENING WITH STRAPS**
- **SOFT AND SUPPLE MATERIAL**
- **CARRYING BAG INCLUDED**

ACCESSORIES

CODE	MODEL
270890003	PAX Vacuum Pump – Handle
273130003	PAX Vacuum Pump – Foot

CODE	MODEL	CARRYING BAG INCLUDED	DIMENSIONS	WEIGHT	MODE	DESIGN	MATERIAL	COLOUR
157500000S	PAX Vacuum Splints set	✔	–	1,33 kg	Vacuum	Anatomical	PAX-Flex Tec MP / PAX-Tec Plus MP	
155555210	PAX Vacuum splint elbow	–	52 x 70 cm	0,50 kg	Vacuum	Anatomical	PAX-Flex Tec MP / PAX-Tec Plus MP	
155545210	PAX Vacuum splint leg	–	100 x 65 cm	1,05 kg	Vacuum	Anatomical	PAX-Flex Tec MP / PAX-Tec Plus MP	
155535210	PAX Vacuum splint forearm	–	51 x 34 cm	0,35 kg	Vacuum	Anatomical	PAX-Flex Tec MP / PAX-Tec Plus MP	
162400000S	PAX Vacuum Splints set - REC	✔	–	1,05 kg	Vacuum	Geometrical	PAX-Flex Tec MP / PAX-Tec Plus MP	
162025210	PAX Vacuum splint - REC Arm	–	46 x 65 cm	580 g	Vacuum	Geometrical	PAX-Flex Tec MP / PAX-Tec Plus MP	
162035210	PAX Vacuum splint - REC Joint	–	55 x 47 cm	490 g	Vacuum	Geometrical	PAX-Flex Tec MP / PAX-Tec Plus MP	
162265210	PAX Vacuum splint - REC Leg	–	106 x 64 cm	760 g	Vacuum	Geometrical	PAX-Flex Tec MP / PAX-Tec Plus MP	

BLUE SPLINTS SET

RIGID SPLINT WITH FLEXIBLE INTERNAL STRUCTURE

More info

Watch the video

SPENCER BLUE SPLINTS set includes 5 highly resistant rigid splints with a carrying bag. Suitable for both adult and paediatric patients, they allow safe and rapid limb immobilisation, supported by strap closures and an orange strap that clearly marks the fixation area.

- **PAEDIATRIC/ADULT PATIENTS**
- **WASHABLE AND EASY TO APPLY**
- **STRAP CLOSURES**
- **TRANSPORT BAG INCLUDED**
- **RESISTANT TO BACTERIAL CONTAMINATION**

SED

EXTRICATION/SPINE IMMOBILIZATION DEVICE

Load capacity **230 KG**

More info

SED is designed to ensure quick and safe extrication of patients from vehicles or other confined spaces due to its vertical rigidity and horizontal flexibility. It can be used on pregnant women, infants and children, also immobilising the hip and pelvic areas. The robust vinyl-coated nylon cover limits abrasion and ensures total integrity. It comes with a comfortable and sturdy carrying bag, neck and chin strap, and cushion for use as neck padding.

- **COLOUR-CODED BELT AND BUCKLE SYSTEM**
- **HIP AND PELVIC AREAS IMMOBILIZATION**
- **ADULT AND PAEDIATRIC USE**
- **EASY SANITATION**
- **CARRYING BAG, NECK AND CHIN STRAP INCLUDED**

CODE	MODEL	DIMENSIONS	LOAD CAPACITY	WEIGHT	MODE	DESIGN	MATERIAL	COLOUR
JM80002	BLUE SPLINT – Rigid splint Set (5 Sizes) with bag	62 x 31 cm	–	1,45 kg	Semi-rigid	Anatomical	Neoprene, Al, Nylon	
JM80003	BLUE SPLINT – Rigid leg splint	58 x 45 cm	–	360 g	Semi-rigid	Anatomical	Neoprene, Al, Nylon	
JM80004	BLUE SPLINT – Rigid arm splint	59 x 28 cm	–	300 g	Semi-rigid	Anatomical	Neoprene, Al, Nylon	
JM80005	BLUE SPLINT – Rigid forearm splint	39 x 30 cm	–	206 g	Semi-rigid	Anatomical	Neoprene, Al, Nylon	
JM80006	BLUE SPLINT – Rigid wrist splint	31 x 24 cm	–	145 g	Semi-rigid	Anatomical	Neoprene, Al, Nylon	
JM80007	BLUE SPLINT – Rigid elbow/ankle splint	54 x 28 cm	–	273 g	Semi-rigid	Anatomical	Neoprene, Al, Nylon	
SR00111	SED – Extrication/spine immobilization device	83 x 90 x 2,5 cm (wrapped 85 x 25 x 12 cm)	230 kg	2,60 kg (without bag)	–	–	PVC, Nylon, PP	
SR00100	SED – Extrication/spine immobilization device XL	83 x 90 x 2,5 cm (wrapped 85 x 25 x 12 cm)	230 kg	2,60 kg (without bag)	–	–	PVC, Nylon, PP	
SR00102	SED – Extrication/spine immobilization device XS	69 x 64 x 2,5 cm (wrapped 73 x 26 x 10 cm)	60 kg	2,10 kg (without bag)	–	–	PVC, Nylon, PP	

PAX RESCUE BOA

EXTRICATION RESCUE MEDICAL DEVICE

More info

PAX RESCUE-BOA is a highly versatile medical device of immobilization of the neck and cervical spine, designed to rescue the patient professionally and quickly, according to the PHTLS course guidelines. It is a valid aid for evacuating people from environments where classic rescue techniques are impossible or where there are time constraints, such as extrication from a vehicle.

It comes in a protective bag and includes three parts:

- an antibacterial cover easy to clean,
- a fleece blanket rolled up for padding,
- a belt with hand loops for effective evacuation maneuvers.

The padding can be used as a heating blanket if necessary, and each part is replaceable.

- **PHTLS-BASED DESIGN**
- **FIRE-RESISTANT AND ANTIBACTERIAL**
- **EASY SANITATION**
- **EACH PART IS REPLACEABLE**
- **PROTECTIVE BAG INCLUDED**

PEDI LOC KIT

PEDIATRIC IMMOBILIZATION SYSTEM

Load capacity **30 KG**

More info

PEDI LOC is a pediatric immobilization and transport system, specifically designed for children up to 30 kg in weight and between 60 and 120 cm in height. Its small size makes it very easy to handle even in tight spaces. It includes the transport system, the PEDI GO head immobilizer, the chin strap, the forehead strap and a transport bag.

- **ADJUSTABLE STRAPS FOR SHOULDERS, THORAX, PELVIS**
- **ADJUSTABLE STRAPS FOR FEMUR, TIBIA**
- **5 CARRY HANDLES**
- **SELF-ADHERENT STRIPS CLOSINGS**
- **MINIMAL STORAGE SPACE**
- **PEDI GO INCLUDED**

CODE	MODEL	DIMENSIONS	LOAD CAPACITY	WEIGHT	HANDLES	MATERIAL	COLOUR
118171908	PAX RESCUE-BOA	Length 315	–	0,90 kg	–	PAX-PES FR/Antibak	
ST02600	PEDI LOC KIT (PEDI GO INCLUDED)	122 x 25 x 3 cm	30 kg	4,5 kg	5	PVC, Wood, Polyurethane	

SPENCER SX

PICK-UP STRETCHER WITHOUT LOG-ROLL MANEUVRES

More info

Load capacity **170 KG**

SPENCER SX is a pickup stretcher with two or three blades for lifting and loading of patients on immobilizing or transport devices such spinal boards, vacuum mattresses or transport stretchers.

Built in aluminium for better resistance, this certified device can be uncoupled on either or both ends and adjusted to 4 different different lengths to accomodate patients with different body frame.

- **DIVISIBLE AND EXTENDABLE**
- **ENABLES RADIOGRAPHIC CHECKS**
- **FOLDABLE, EASY TO TRANSPORT AND STORE**
- **ADJUSTABLE 4 DIFFERENT LENGTHS**
- **EASY SANITATION**

10-XLP

PICK-UP STRETCHER

More info

Load capacity **200 KG**

10-XLP is a lightweight pick-up stretcher made of polyethylene, designed primarily for patient transport in pre-hospital, sports and military settings. The two-part separable structure, equipped with friction devices at the ends, allows an efficient reduction of storage space. The concave shape significantly reduces patient movement during loading, minimizing the risk of secondary injuries and providing support and stability. X-ray compatible and easy to sterilize, the 10-XLP stretcher is adjustable to three different positions depending on the patient's height.

- **TWO-PART SEPARABLE AND CONCAVE DESIGN**
- **FOLDABLE, EASY TO TRANSPORT AND STORE**
- **ADJUSTABLE LENGTH WITH 3 SETTINGS**
- **SAFETY BELTS (3 PIECES) INCLUDED**
- **ENABLES RADIOGRAPHIC CHECKS**

DID YOU KNOW? The adaptability of the SPENCER SX and 10XLP in length and width reduces the need to move the patient's cervical spine, minimising the risk of further injury and allows the device to be adapted to different body shapes. The exposed central area facilitates radiographic checks.

CODE	MODEL	INCLUDED BELTS	BLADES	MIN/MAX LENGTH	LENGTH WHEN FOLDED	WIDTH	THICKNESS	LOAD CAPACITY	MATERIAL	WEIGHT WITH BELTS
ST05001	SXR RED KEY Pick-up stretcher 3 blades	3 x STX597 (1 piece belt)	3	168-210 cm	121 cm	42 cm	8,5 cm	170 kg	Aluminium	9 kg
ST05002	SXR RED KEY Pick-up stretcher 2 blades	3 x STX597 (1 piece belt)	2	168-210 cm	121 cm	42 cm	8,5 cm	170 kg	Aluminium	9 kg
ST05049	SXR RED KEY Pick-up stretcher 3 blades	3 x STX598 (2 piece belt)	3	168-210 cm	121 cm	42 cm	8,5 cm	170 kg	Aluminium	9 kg
ST05062	SXR RED KEY Pick-up stretcher 2 blades	3 x STX598 (2 piece belt)	2	168-210 cm	121 cm	42 cm	8,5 cm	170 kg	Aluminium	9 kg
10-XLP	10-XLP Pick-up stretcher	3	–	167-200 cm	120 cm	42 cm	7,5 cm	200 kg	PE	7,5 kg

SPENCER 100 | 110 | 122 SERIES

FOLDABLE EMERGENCY STRETCHER

These emergency stretchers that can be folded lengthwise or widthwise or in 4 parts depending on the model are designed with structural and functional features that make them ideal as secondary stretchers or for use in confined spaces. Each product includes two restraint belts.

More info

Load capacity **170 KG**

ACCESSORIES

CODE	MODEL
ST00115	STX 15 – Yellow transport bag for SPENCER 122 stretchers

SPENCER 122

SPENCER 110

SPENCER 128

- **MINIMAL STORAGE SPACE**
- **STACKABLE**
- **FOLDABLE FRAME**
- **EASY SANITATION**

DID YOU KNOW? Compact, versatile and designed to be efficient, the emergency stretchers in this series have an extremely lightweight and durable construction, which guarantees quick and safe patient transport. Their ingenious design allows it to be folded both lengthwise and widthwise, maximising space efficiency and making it an ideal choice for storage in environments with limited space.

CODE	MODEL	LENGTH	FOLDED LENGTH	WIDTH	FOLDED WIDTH	HEIGHT	THICKNESS FOLDED	LOAD CAPACITY	MATERIAL	WEIGHT	SUPPORT FEET	CANVAS COLOUR
ST30100	SPENCER 100 Lengthwise foldable stretcher	201 cm	100 cm	48 cm	–	14 cm	17 cm	170 kg	Al, Steel, PVC	5,5 kg	4	
ST30108	SPENCER 100 Lengthwise foldable stretcher	201 cm	100 cm	48 cm	–	14 cm	17 cm	170 kg	Al, Steel, PVC	5,5 kg	4	
ST30110	SPENCER 110 Widthwise foldable stretcher	201 cm	–	55 cm	11 cm	14 cm	–	170 kg	Al, Steel, PVC	6 kg	4	
ST30113	SPENCER 110 Widthwise foldable stretcher	201 cm	–	55 cm	11 cm	14 cm	–	170 kg	Al, Steel, PVC	6 kg	4	
ST00122	SPENCER 122 Foldable stretcher	201 cm	100 cm	55 cm	40 cm	14 cm	17 cm	170 kg	Al, Steel, PVC	6,5 kg	4	
ST00124	SPENCER 122 Foldable stretcher	201 cm	100 cm	55 cm	40 cm	14 cm	17 cm	170 kg	Al, Steel, PVC	6,5 kg	4	
ST00129	SPENCER 122 Foldable stretcher	201 cm	100 cm	55 cm	40 cm	14 cm	17 cm	170 kg	Al, Steel, PVC	6,5 kg	4	
ST00128	SPENCER 128 Four foldable stretcher	209,5 cm	58 cm	54 cm	21 cm	7 cm	12 cm	170 kg	Al, Steel, PVC	6 kg	4	

SPENCER 200 | 250 | 310 SERIES

FOLDABLE EMERGENCY STRETCHERS WITH WHEELS OR BACKREST

Designed with structural and functional features that make them ideal as secondary stretchers or for use in environments with limited storage space, the folding emergency stretchers in this series are available with both wheels and backrests. Each product includes two restraint belts.

More info

Load capacity **170 KG**

- **STACKABLE**
- **FOLDABLE FRAME**
- **MINIMAL STORAGE SPACE**
- **EASY SANITATION**
- **AVAILABLE WITH ADJUSTABLE BACKREST OR WHEELS**

SPENCER 205

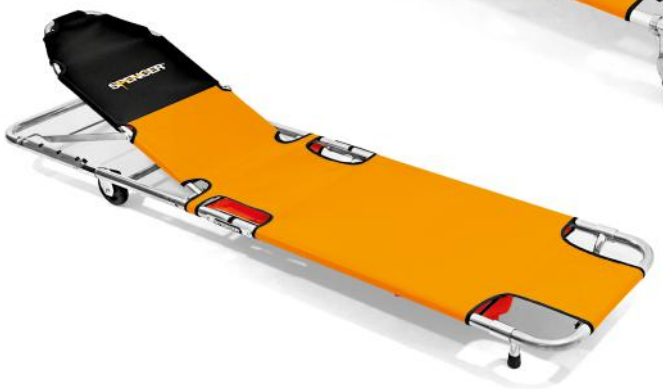

SPENCER 310

ACCESSORIES

CODE	MODEL
ST00115	STX 15 – Yellow transport bag for SPENCER 122 stretchers

DID YOU KNOW? Made of high-strength aluminium alloy and equipped with a resistant and washable SPEN-TEX sheet, the Spencer field stretchers in this series are ideal for field hospitals, disaster management or sporting events. Compact, versatile and designed to be efficient, they are stackable and optimise storage space when many units are needed.

CODE	MODEL	LENGTH	FOLDED LENGTH	WIDTH	HEIGHT	THICKNESS FOLDED	LOAD CAPACITY	MATERIAL	WEIGHT	WHEELS	SUPPORT FEET	CANVAS COLOUR
ST30200*	Spencer 200 Foldable emergency stretcher	188,5 cm	92,5 cm	49 cm	–	16,5 cm	170 kg	Al, Steel, PVC	5 kg	2	2	
ST00205*	SPENCER 205 Compact folding transport stretcher	189 cm	95 cm	48 cm	18 cm	8 cm	170 kg	Al, Steel, PVC	6,2 kg	2	2	
ST20205*	SPENCER 205 Compact folding transport stretcher	189 cm	95 cm	48 cm	18 cm	8 cm	170 kg	Al, Steel, PVC	6,2 kg	2	2	
ST30250	Spencer 250 Lengthwise compact foldable stretcher	189 cm	95 cm	48 cm	–	6 cm (opened 3 cm)	170 kg	Al, Steel, PVC	5,5 kg	–	–	
ST30270	Spencer 270 Emergency stackable stretcher	188,5 cm	–	48 cm	17,5 cm	–	170 kg	Al, Steel, PVC	5 kg	–	4	
ST30280	Spencer 280 Emergency stackable stretcher	188,5 cm	–	48 cm	17,5 cm	–	170 kg	Al, Steel, PVC	5 kg	–	4	
ST10280	Spencer 280 Emergency stackable stretcher	188,5 cm	–	48 cm	17,5 cm	–	170 kg	Al, Steel, PVC	5 kg	–	4	
ST30281	Spencer 281 Emergency stackable stretcher with head support	188,5 cm	–	48 cm	17,5 cm	–	170 kg	Al, Steel, PVC	5 kg	–	4	
ST30310*	Spencer 310 Foldable stretcher with backrest	187 cm	94,5 cm	50 cm	16 cm	16 cm	170 kg	Al, Steel, PVC	6,5 kg	2	2	

PAX CARRYING SHEET WITH ANTI-SLIP PROTECTION L

Load capacity **150 KG**

CARRYING SHEET WITH ANTI-SLIP PROTECTION

It is a transport sheet featuring a foot pocket and anti-slip protection, designed for quick and safe patient transfer in emergency and rescue situations. Thanks to its versatility and durability, it adapts to various critical scenarios, providing optimal support during transport. The multiple grab handles allow for even and coordinated lifting by several operators.

- **MINIMAL STORAGE SPACE**
- **8 GRAB HANDLES**
- **EASY SANITATION**

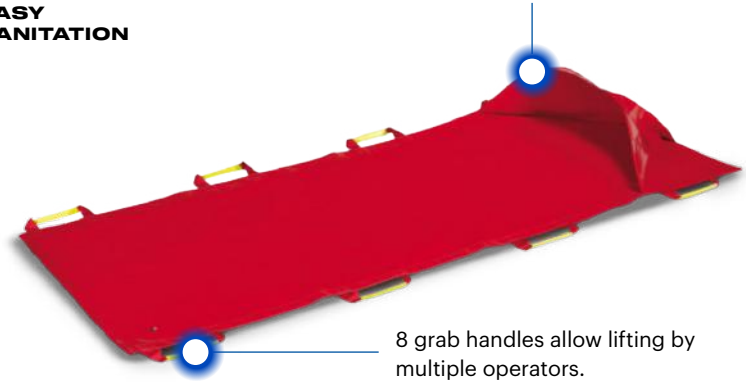

PAX XXL 400 KG

Load capacity **UP TO 400 KG**

BARIATRIC CARRYING SHEET (UP TO 400 KG)

This increased weight capacity carrying sheet is designed for transferring bariatric patients and features 26 extra-large handles distributed around the perimeter and in additional rows, allowing for grasping with both hands and lifting by multiple caregivers.

- **BARIATRIC TRANSPORT**
- **EXTRA-WIDE AND MULTIPLE HANDLES**
- **TRANSPORT BAG INCLUDED**

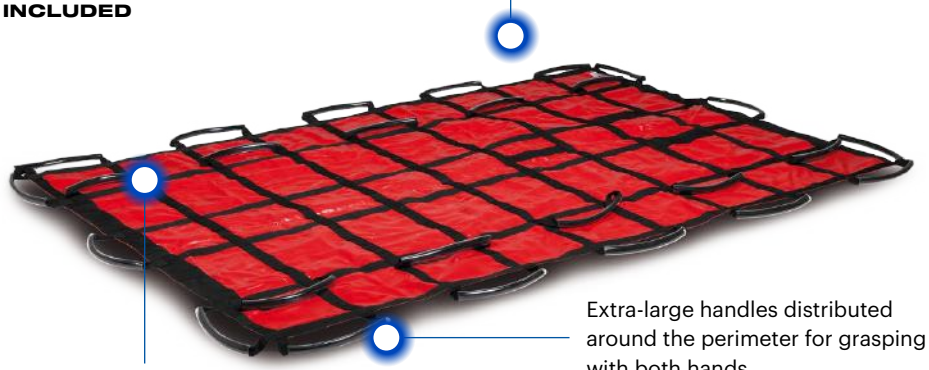

CODE	MODEL	CARRYING BAG INCLUDED	HANDLES	DIMENSIONS	LOAD CAPACITY	MATERIAL	WEIGHT	COLOUR
102260201	PAX CARRYING SHEET WITH ANTI-SLIP PROTECTION L	N.A.	8	198 x 81 cm	150 kg	PAX-Plan	1,50 kg	●
104490201	PAX CARRYING SHEET BASIC	N.A.	8	198 x 85 cm	0,85 kg	PAX-Plan	1,50 kg	●
278890401	PAX CARRYING SHEET LIGHT	✔	6	190 x 105 cm	150 kg	PAX-Light	270 g	●
102270201	PAX CARRYING SHEET XL WITH WEIGHT INDICATION	✔	14	200 x 120 cm	250 kg	PAX-Plan	3,90	●
101820201	PAX XXL 400 KG	✔	26	240 x 160 cm	400 kg	PAX Plan	6,60 kg	●

WOW

CARRYING SHEET WITH 10 HANDLES AND PATIENT RESTRAINTS

WOW is a carrying sheet for patients with no signs of spine trauma, and it is made of durable, easy to clean materials. It is the best solution for stairway descent when speed or cramped spaces prevent the use of stretchers or evacuation chairs. The structure can be reinforced with aluminium rods and the adjustable straps help distribute the load over a larger area.

- **EASY TO CLEAN MATERIALS**
- **REMOVABLE ALUMINUM RODES TO REINFORCE THE FABRIC**
- **SITTING POSITION TRANSPORT**
- **ADJUSTABLE CARRYING STRAPS**
- **INTEGRATED BELTS FOR SAFE PATIENT IMMOBILIZATION**
- **TWO OPERATORS REQUEST**

Load capacity **150 KG**

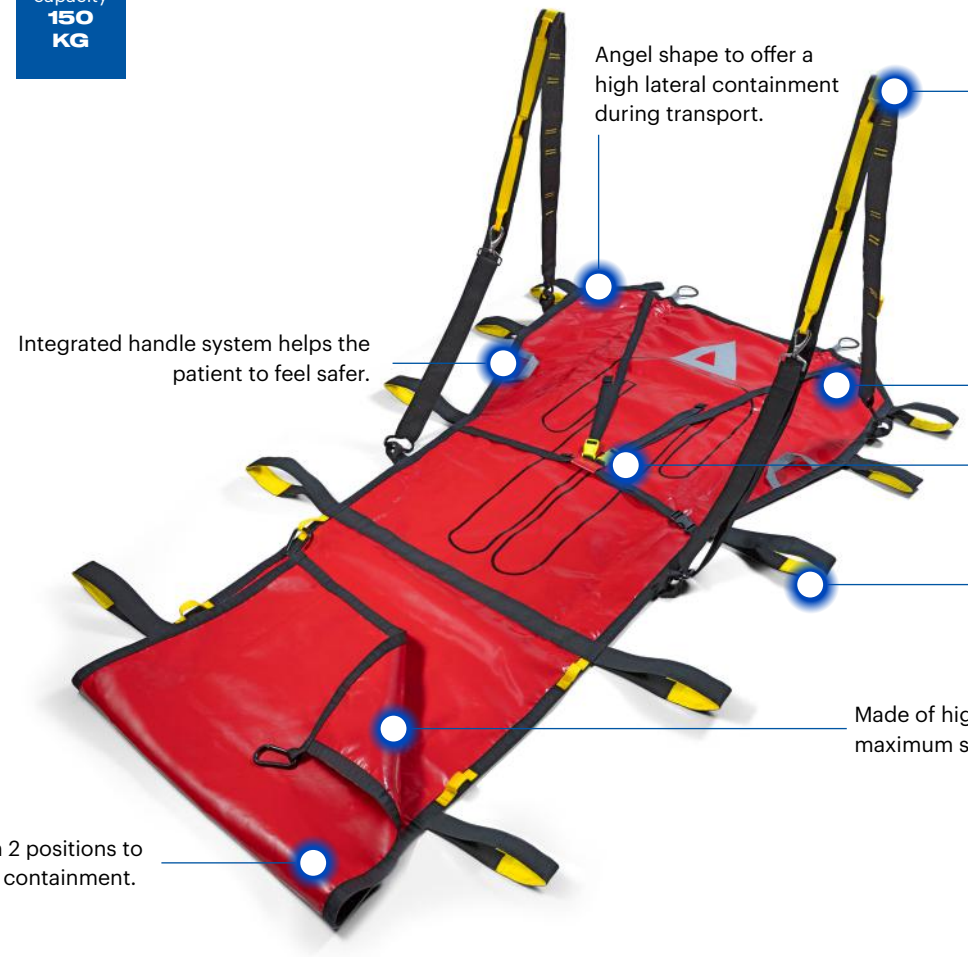

DID YOU KNOW? Longitudinal aluminum rods used to reinforce the fabric are removable through special holes. They can also be bent into three parts. Once inserted, they increase the rigidity of the plate and distribute the load over a larger surface, offering the possibility of transporting the patient in a sitting position.

CODE	MODEL	DIMENSIONS	WRAPPED STORAGE	LOAD CAPACITY	MATERIAL	DIMENSIONS HANDLES	HANDLES LENGTH	ROD LENGTH	DIMENSIONS OF SINGLE FOLDED ROD	WEIGHT
284970201	WOW Carry sheets 10 handles with footrest	256 x 96 cm (top) 256 x 70 cm (footside)	50 x 60 x 15 cm	250 kg	Nylon, PVC, Aluminium	17 x 5 cm	16 cm (top) 26 cm (footside)	121 cm	7,4 x 45 x 3 cm	4,7 kg

RESUSCITATION AND SUCTION

MATRIX INTUBE

COMPLETE AND MULTIFUNCTIONAL INTUBATION KIT

More info

MATRIX INTUBE is a complete and multifunctional intubation kit specifically designed for first responders, enclosed in a compact and durable high-resistance bag.

It includes all the essential devices commonly used during rescue operations for airway management:

CODE DG80550 C-F - Sterile cuffed endotracheal tube Sz 5
CODE DG80560 C-F - Sterile cuffed endotracheal tube Sz 6
CODE DG80570 C-F - Sterile cuffed endotracheal tube Sz 7
CODE DG80580 C-F - Sterile cuffed endotracheal tube Sz 8
CODE FG00609-OLD D-Magill Pediatr. tube guide forceps 20 cm
CODE RM30800 D-Mounder helical mouth opener
CODE DG00111 Ime empty eva bag for intubation kit
CODE DG03735 D-S-Blade Miller blade Sz 1 traditional light
CODE DG03736 D-S-Blade Miller blade Sz 2 traditional light
CODE DG03737 D-S-Blade Miller blade Sz 3 traditional light
CODE DG50300 Dgx 30 - Flexible mandrel adult
CODE GM03050 Gmx 05 - Sterile single-use syringe 5 ml
CODE GM03100 Gmx 10 - Sterile single-use syringe 10 ml
CODE GM03225 S-Plaster - Silk tape roll 2.5 cm x 9.14 m
CODE DG05011 D-Lama Macintosh Sz 1
CODE DG03104 D-Handle laryngoscope conventional light adult
CODE DG05012 D-Lama Macintosh Sz 2
CODE FG00608-OLD D-Magill Ad. tube guide forceps 25 cm
CODE RM10503 D-Cannula Guedel ISO 6.5/Sz 1
CODE RM10504 D-Cannula Guedel ISO 7.0/Sz 1.5
CODE RM10505 D-Cannula Guedel ISO 8.0/Sz 2
CODE RM10506 D-Cannula Guedel ISO 9.0/Sz 3
CODE RM10501 D-Cannula Guedel ISO 5.0/Sz 00
CODE RM10502 D-Cannula Guedel ISO 5.5/Sz 0
CODE DG00604 D-Universal Rounded tip scissors 19 cm
CODE DG05013 D-Lama Macintosh Sz 3

- **REFLECTIVE INSERTS**
- **2 SEMI-RIGID INNER DIVIDERS**
- **MULTIPLE INNER STRAPS**

KDX CASE

WATERTIGHT RESUSCITATION CASE

More info

KDX CASE is a shock-resistant and watertight container, specifically designed to protect resuscitation and medical equipment during rescue operations in demanding environments.

- **REINFORCED STRUCTURE**
- **CUSTOMISABLE INTERIOR, MOUNT-READY**
- **PROTECTIVE SEAL, PADDED INTERIOR**

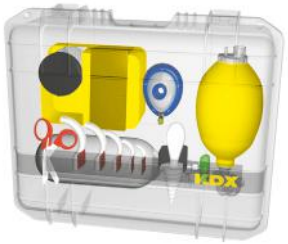

RES-Q-BOARD

RESUSCITATION BOARD

More info

RES-Q-BOARD is designed to optimise cardiopulmonary resuscitation manoeuvres. The anatomical shape allows correct positioning of the patient, keeping the airway open while making external cardiac massage more effective.

- **ANTI-SLIP TOP, STABILISING BASE**

CODE	MODEL	EXTERNAL DIMENSIONS	INTERNAL SPACE	WEIGHT	MATERIAL	COLOUR
DG80108	MATRIX INTUBE Semi-rigid professional intubation kit	31 x 36 x 10 cm	–	850 g (empty bag)	EVA	●
CB06073	KDX 1 Resuscitation case	40,5 x 51,5 x 20 cm	35,5 x 47,5 x 18 cm	4 kg – 3,6 kg (without foam)	PP, PE	●
RB70001	RES-Q-BOARD Resuscitation board	60,5 x 41,5 x 7 cm	–	1,49 kg	PE	●
RB70002	RES-Q-BOARD Resuscitation board	60,5 x 41,5 x 7 cm	–	1,49 kg	PE	●

D-PRO B-LIFE

DISPOSABLE PVC MANUAL RESUSCITATOR

D-PRO B-LIFE is a disposable, self-inflating manual resuscitator designed for the mechanical ventilation of trauma patients or individuals experiencing respiratory distress. Intended for use with patients weighing approximately 33 kg or more, it can be connected to an external oxygen supply.

- **PATIENT WEIGHING 33 KG**
- **OXYGEN SOURCE CONNECTION**
- **STANDARD CONNECTION ISO 15/22 MM**

D-B-LIFE

REUSABLE SILICON RESUSCITATOR

D-B-LIFE is a reusable, self-inflating manual resuscitator designed for the mechanical ventilation of trauma patients or individuals experiencing respiratory distress. It can be connected to an external oxygen supply and steam sterilised.

- **STEAM STERILISABLE**
- **OXYGEN SOURCE CONNECTION**
- **STANDARD CONNECTION ISO 15/22 MM**

D-B-LIFE MASK

LATEX-FREE FACE MASK

Più info

D-B-Life mask is an autoclavable face mask suitable for resuscitation and assisted ventilation. Made of latex-free silicone and polycarbonate, it is available in different sizes to ensure maximum adaptability to each patient. Its transparent shell is soft and hypoallergenic.

CODE RM20100 D-B-LIFE Infant Size 0 face mask
CODE RM20101 D-B-LIFE infant Size 1 face mask
CODE RM20102 D-B-LIFE paediatric Size 2 face mask
CODE RM20103 D-B-LIFE adult Size S3 face mask
CODE RM20104 D-B-LIFE adult Size M4 face mask
CODE RM20105 D-B-LIFE adult Size L5 face mask

- **AUTOCLAVABLE**
- **LATEX FREE AND HIPOALLERGENIC MASK**

CODE	MODEL	MATERIAL	BAG VOLUME	RESERVOIR VOLUME	STROKE VOLUME	OVERPRESSURE VALVE
BG02100	D PRO B-LIFE ADULT	PVC	1630 ml	2000 ml	800 ml	60 cm H_2O
BG02101	D PRO B-LIFE PAEDIATRIC	PVC	680 ml	1600 ml	350 ml	40 cm H_2O
BG02102	D PRO B-LIFE INFANT	PVC	340 ml	1600 ml	150 ml	40 cm H_2O
BG03200	D B-LIFE ADULT	Silicon, PVC, PC	1630 ml	2000 ml	800 ml	60 cm H_2O
BG03201	D B-LIFE PAEDIATRIC	Silicon, PVC, PC	680 ml	1600 ml	350 ml	40 cm H_2O
BG03202	D B-LIFE INFANT	Silicon, PVC, PC	340 ml	1600 ml	150 ml	40 cm H_2O

D-B-VAC

More info

MANUAL ASPIRATOR WITH ADULT/ PAEDIATRIC CATHETER

D-B-VAC is a portable, compact, lightweight suction unit for manual aspiration: powered by one hand, its function is the removal of fluids from respiratory tracts or from the respiration support system and of infective material from wounds. The collection container (disposable) is integrated with a dedicated filter. It includes a catheter for adult or paediatric use.

- ADULT AND PAEDIATRIC USE
- DISPOSABLE CATHETER AND COLLECTION VESSEL
- DISPOSABLE ANTIBACTERICAL FILTER

RES-Q-VAC

More info

MANUAL SUCTION PUMP BY PRESSING A PEDAL

RES-Q VAC is a compact size manual suction device, for the removal of fluids from the respiratory tract or the support system to breathing and infectious material from wounds.
It includes a 400 ml autoclavable container with overflow valve and a disposable antibacterial filter to reduce contamination risks. It features a 130 cm suction tube and a sturdy metal pedal, resistant to pressure from hands, knees, or feet.

- 130 CM SUCTION TUBE
- 400 ML AUTOCLAVABLE CONTAINER
- MADE IN POLYCARBONATE
- DISPOSABLE ANTIBACTERICAL FILTER

ACCESSORIES

CODE	MODEL
RV71104	RES-Q-VAC Transport bag (orange)

CODE	MODEL	DIMENSIONS	WEIGHT	MAXIMUM VACUUM	VESSEL CAPACITY	SUCTION RATE	COLOUR
RV71170	D-B-VAC Manual suction of secretions	21 x 17 x 7,5 cm	270 g	550 mmHg	350 ml	20 L/m	
RV71140	RES-Q-VAC Manual suction of secretions	22,5 x 16,5 x 15 cm	1,4 kg	300 mmHg	400 ml	22 L/m	

BLANCO

MULTIFUNCTION PORTABLE SUCTION DEVICE

More info

BLANCO is a versatile suction device designed for easy transport and frequent use, making it ideal for a variety of applications, including hospital wards, tracheotomy care, the removal of body fluids, and minor surgical procedures. It comes equipped with a 1000 or 2000 ml autoclavable collection jar and an AC/DC universal adapter with a detachable power cord.

- **BATTERY POWERED**
- **LED BATTERY STATUS INDICATOR**
- **AUTOCLAVABLE COLLECTION JAR**
- **1000/2000 ML AVAILABLE**

PULSEVAC

FIXED SUCTION DEVICE

More info

PULSEVAC is a fixed suction device designed for the effective removal of bodily fluids such as mucus, vomit, and blood, for therapeutic purposes in emergency settings. The device is intended for permanent installation inside ambulances and requires a suitable compartment within the vehicle to ensure secure mounting and protection of the vacuum source. The user interface consists of an intuitive knob for vacuum adjustment, allowing the operator to select the suction level among eight preset and automatically regulated values.

- **CONTAINER WALL MOUNT INCLUDED**
- **AUTOMATICALLY REGULATED SUCTION**
- **8 PRESET SUCTION LEVELS**
- **LED INDICATOR FOR VACUUM LEVEL**

CODE	MODEL	DIMENSIONS	WEIGHT	MAXIMUM VACUUM	VESSEL CAPACITY	SUCTION RATE	ACOUSTIC LEVEL	BATTERY VOLTAGE	OPERATING MODE	COLOUR
SC10050	BLANCO Suction vacuum 16L /min.	35 x 21 x 18 cm	2,5 kg	563 mmHg	1 L	16 L/m	60,5 dB	230V	Continuous	○ ●
SC10051	BLANCO Suction vacuum 16L /min.	35 x 21 x 18 cm	3,5 kg	563 mmHg	1 L	16 L/m	63 dB	12V	Continuous	○ ●
SC10052	BLANCO Suction vacuum 25 L/min.	35 x 21 x 18 cm	2,5 kg	563 mmHg	1 L	25 L/m	63 dB	12V	20 min ON/40 min OFF	○ ●
SC10053	BLANCO Suction vacuum 40 L/min.	35 x 21 x 18 cm	3,6 kg	600 mmHg	1 L	40 L/m	63 dB	230V	Continuous	○ ●
SC10054	BLANCO Suction vacuum 36 L/min.	35 x 21 x 18 cm	4 kg	600 mmHg	1 L	36 L/m	65,5 dB	12V	60 min. ON	○ ●
SC10055	BLANCO Suction vacuum 36 L/min.	35 x 21 x 18 cm	4,4 kg	600 mmHg	2 L	36 L/m	65,5 dB	12V	60 min. ON	○ ●
SC20000	PULSEVAC Fixed suction device	22,8 x 11,3 x 6,1 cm	910 g	Preset: -60/-80/-100/-120/-150/-200/-350/-600 mmHg	1 L	High vacuum/ high flow	≤ 70 dB	Da 12 a 15 V	50 min ON / 10 min OFF	–
SC21000	PULSEVAC Fixed suction device with Serres container	22,8 x 11,3 x 6,1 cm	910 g	Preset: -60/-80/-100/-120/-150/-200/-350/-600 mmHg	1 L	High vacuum/ high flow	≤ 70 dB	Da 12 a 15 V	50 min ON / 10 min OFF	–

BATTERY POWER SPECIFICATIONS INCLUDED: Battery operating time: 60 min – Battery recharging time: 120/150 min. – Battery type: 12 V DC Ni-MH. – Power consumption: 4 A – 12V power cable.

AMBUJET

BATTERY POWERED PORTABLE SUCTION UNIT WITH 10G/20G RECHARGEABLE WALL MOUNT

Suction unit that combines powerful suction with ease of use and robust protection. The broad base ensures stability and doubles as a charging station and wall fixing. A snap-in system makes it quick to attach or replace the container, and the easy-push button allows for fast release from the wall mount.

More info

This model (Code SC75650) includes:
- Disposable patient tube 1,8 mt
- Shoulder strap for easy transport

- **REUSABLE CANISTER**
- **POLYETHYLENE PROTECTIVE SHELL**
- **10G/20G RECHARGEABLE WALL MOUNT**
- **LED BATTERY STATUS INDICATOR**
- **BATTERY POWERED**

ACCESSORIES

CODE	MODEL
SC75012	AMBUJET carrier bag
SC75014	Supply cable for cigarette lighter 12vcc
SC73017	220V Power supply
RISC005	Antibacterial filter
SC73016	Suction catheter 1,8 m
SC70085	Autoclavable canister 1L

JET COMPACT

COMPACT AND LIGHTWEIGHT PORTABLE SUCTION UNIT

More info

JET is an extremely compact suction device to be used to remove fluids from the airway or respiratory support system. It can be powered via a 12V car cable or through a 220V AC mains power supply.

This model (Code SC75100) includes:
- 12V power cable
- Disposable container with filter
- Disposable patient tube (1 mt)

- **LED BATTERY STATUS INDICATOR**
- **ADULT AND PAEDIATRIC USE**
- **EFFICIENT AND QUIETER OPERATIONS**
- **BATTERY POWERED**

ACCESSORIES

CODE	MODEL
SC75011	Transport bag for Jet Compact

CODE	MODEL	DIMENSIONS	WEIGHT	DIMENSIONS WITH FASTENING	FASTENING WEIGHT	MAXIMUM VACUUM	VESSEL CAPACITY	SUCTION RATE	BATTERY POWERED	ACOUSTIC LEVEL	OPERATING MODE
SC75510	AMBUJET P 1000 B 20G	20 x 22,5 x 28,5 cm	2,4 kg	20 x 22,5 x 32 cm	0,8 kg	da 50 a 550 mmHg (±27,5 mmHg)	1 L	32 L/m	✔	70 dB	30′ ON / 30′ OFF
SC75560	AMBUJET P 1000 B 10G	20 x 22,5 x 28,5 cm	2,65 kg	20 x 22,5 x 32 cm	0,8 kg	da 50 a 550 mmHg (±27,5 mmHg)	1 L	32 L/m	✔	70 dB	30′ ON / 30′ OFF
SC75600	AMBUJET P 1000 R 20G	20 x 22,5 x 28,5 cm	2,4 kg	20 x 22,5 x 32 cm	0,8 kg	da 50 a 550 mmHg (±27,5 mmHg)	1 L	32 L/m	✔	70 dB	30′ ON / 30′ OFF
SC75650	AMBUJET P 1000 R 10G	20 x 22,5 x 28,5 cm	2,65 kg	20 x 22,5 x 32 cm	0,8 kg	da 50 a 550 mmHg (±27,5 mmHg)	1 L	32 L/m	✔	70 dB	30′ ON / 30′ OFF
SC75710	AMBUJET 1000 B 20G	20 x 22,5 x 28,5 cm	2,4 kg	20 x 22,5 x 32 cm	0,8 kg	da 50 a 550 mmHg (±27,5 mmHg)	1 L	32 L/m	✔	70 dB	30′ ON / 30′ OFF
SC75760	AMBUJET 1000 B 10G	20 x 22,5 x 28,5 cm	2,65 kg	20 x 22,5 x 32 cm	0,8 kg	da 50 a 550 mmHg (±27,5 mmHg)	1 L	32 L/m	✔	70 dB	30′ ON / 30′ OFF
SC75800	AMBUJET 1000 R 20G	20 x 22,5 x 28,5 cm	2,4 kg	20 x 22,5 x 32 cm	0,8 kg	da 50 a 550 mmHg (±27,5 mmHg)	1 L	32 L/m	✔	70 dB	30′ ON / 30′ OFF
SC75850	AMBUJET 1000 R 10G	20 x 22,5 x 28,5 cm	2,65 kg	20 x 22,5 x 32 cm	0,8 kg	da 50 a 550 mmHg (±27,5 mmHg)	1 L	32 L/m	✔	70 dB	30′ ON / 30′ OFF
SC75100	JET COMPACT 300 D	24,5 x 7 x 18,5 cm	1,6 kg	–	–	da 50 a 550 mmHg (±27,5 mmHg)	300 ml	32 L/m	✔	70 dB	30′ ON / 30′ OFF
SC75101	JET COMPACT 300D with 220V power supply	24,5 x 7 x 18,5 cm	1,6 kg	–	–	da 50 a 550 mmHg (±27,5 mmHg)	300 ml	32 L/m	✔	70 dB	30′ ON / 30′ OFF
SC75105	JET COMPACT 300 D with reduced-pass cig lighter plug	24,5 x 7 x 18,5 cm	1,6 kg	–	–	da 50 a 550 mmHg (±27,5 mmHg)	300 ml	32 L/m	✔	70 dB	30′ ON / 30′ OFF

BATTERY POWER SPECIFICATIONS INCLUDED: Battery recharging time: 5 hours 12 V. – Battery type: 12 V DC Ni-MH. – Electrical connection requirements: 100-240 VAC 47-63 Hz 0.75 A max | 12 V DC, 33 W max.

MEDICAL GAS DISTRIBUTION LINES

SECURITY AND CONTINUITY OF OPERATIONS

The administration of medical gases is a vital element in emergency services, used for assisted breathing, anaesthesia and pain control, including oxygen, medical air, nitrous oxide and vacuum. Their delivery requires certified devices and standardized components to ensure safety and prevent errors or contamination. Dispensing lines, essential in ambulance interiors (especially type B and C), connect cylinders or fixed systems to masks, ventilators and other devices, ensuring continuous and controlled gas supply.

FIND OUT MORE

Spencer medical gas distribution solutions are modular and customizable, ideal for adapting to any type of ambulance according to the most rigorous international standards, and can include:

- Control and alarm systems
- Gas outlets
- Oxygen tanks and masks
- Exchange valves for oxygen tanks
- Manometer
- Flowmeter and humidifiers
- On/off selectors
- Wall fixation systems
- Vacuum pumps

Medical gas line distribution we install is compliant with the most stringent international norms and prescriptions. The fixation systems have been tested and 10G certified.

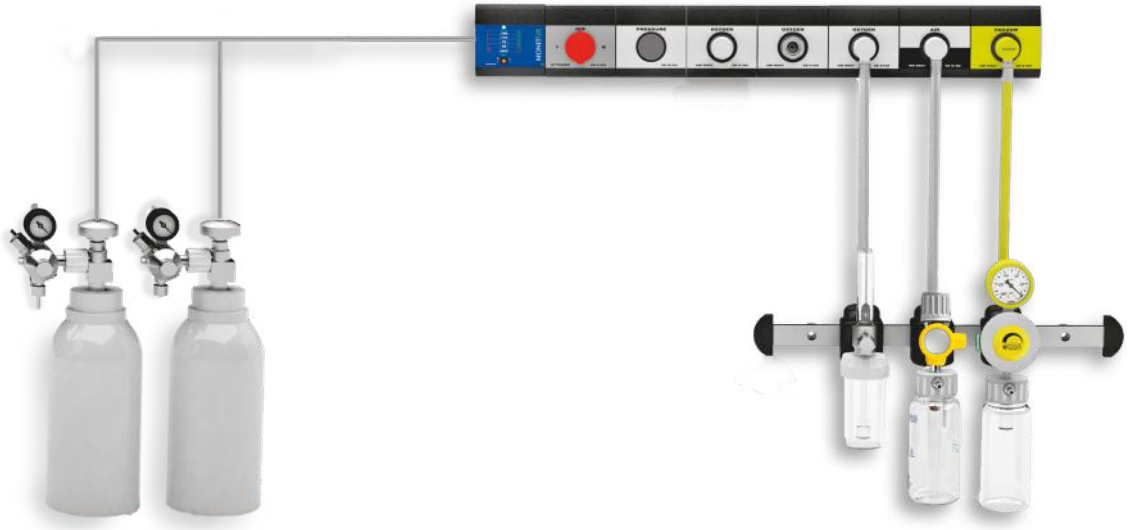

QUALITY SYSTEMS – REFERENCE STANDARDS

MDR REGULATION (EU) 2017/745

European regulation governing the placing on the market and use of medical devices, ensuring high standards of safety, performance, and protection of patients and users within the EU.

EN 1789

European standard specifying requirements for the design, testing, performance, and equipment of medical vehicles and their internal equipment, to ensure safety and effective patient care during transport.

EN ISO 20789

Anaesthetic and respiratory equipment – Passive humidifiers.

EN ISO 5359

Anaesthetic and respiratory equipment – low-pressure hose assemblies for use with medical gases.

EN ISO 9170-1

Terminal units for medical gas pipeline systems, Part 1: Terminal units for use with compressed medical gases and vacuum.

10G Approved

MEDICAL GAS LINE DISTRIBUTION

The medical gas distribution devices on board emergency vehicles are designed with technical features that guarantee their efficiency, safety and adaptability to the limited space of ambulances:

- Technology and design of all components make them easy and safe to install. The collector forged in aluminium occupies less space and optimises the compensated chamber.
- Spencer medical gas distribution lines are compatible with both portable cylinders and centralised systems, offering maximum flexibility of use.
- The modular panels are equipped with standardised gas outlets for oxygen, air and vacuum, while valves, pressure gauges and flow meters allow precise control of flows.
- All components are made from materials certified for medical use and resistant to shock, vibration and extreme environmental conditions.

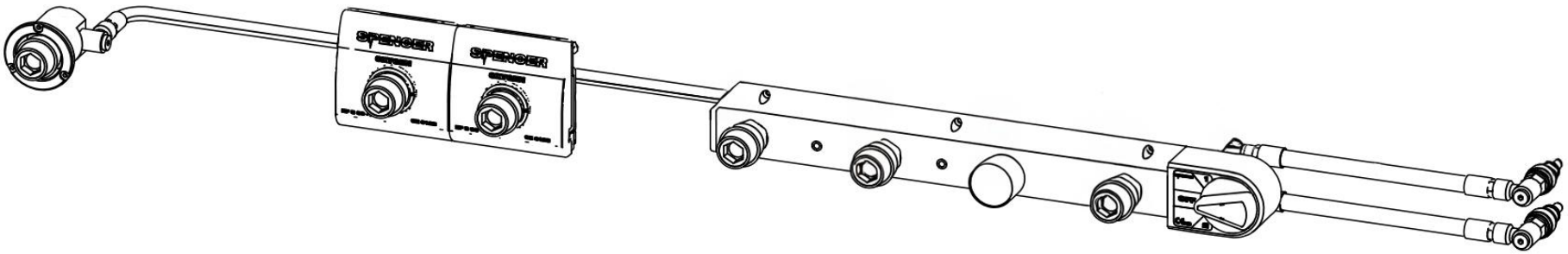

Medical gas is stored in special cylinders and distributed through a dedicated piping system until it reaches the terminal intakes, i.e. the physical points where the operator can withdraw the gas for delivery to the patient. Medical vacuum, on the other hand, is generated by a specific system and similarly conveyed through piping to the relevant outlet.

All components - sockets, cylinders, tubing and couplings - are designed in a gas-specific manner, i.e. differentiated by colour, shape and configuration, to prevent any risk of interchangeability. There are standards for the different interconnections needed to ensure that the medical gas arrives from the cylinder to the flowmeter connected to the outlet (dispensing point) in a safe manner.

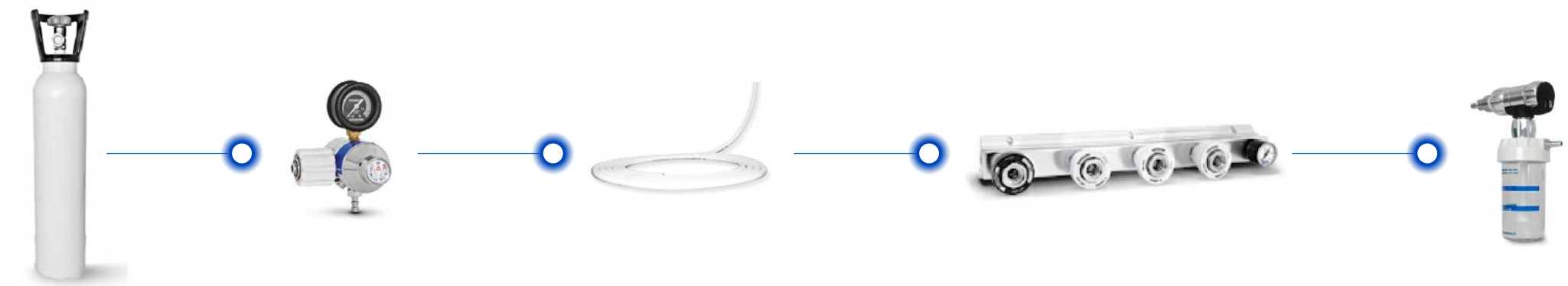

MEDICAL GAS CYLYNDERS

Medical gas cylinders compliant with BS, DIN, UNI, and NF standards are available with oxygen, medical air, and nitrous oxide, in various sizes to meet different operational and transport requirements. They generally consist of a steel or aluminium alloy cylinder, materials chosen for their strength and lightness. Inside, oxygen is stored at a high pressure of between 200 and 220 bar to ensure prolonged availability in critical situations. Each cylinder is equipped with a direct-acting valve, which is opened or closed simply by turning the knob, which acts directly on the dispensing mechanism.

DID YOU KNOW? Even a small leak from a high-pressure cylinder can drastically reduce the available autonomy, which is why every component of the line must be perfectly tested and maintained.

OX-T
OXYGEN TANK WITH VALVE

CODE OX10005 0,5LT UNI with valve
CODE OX10011 1LT UNI with ring and valve
CODE OX10013 1LT UNI with ring and valve
CODE OX10015 2LT UNI with ring and valve
CODE OX10018 2LT UNI with residual valve + ring
CODE OX10019 2LT DIN with valve/ring
CODE OX10020 2LT UNI with ring and valve
CODE OX10023 2LT NF with ring
CODE OX10039 2LT UNI without ring with empty valve
CODE OX10040 2LT BS with ring and empty valve
CODE OX10044 2lt DIN with valve without empty ring
CODE OX10045 2lt BS with valve without empty ring

OX-VA
OXYGEN TANK WITH VALVE AND EMPTY PROTECTION

CODE OX10050 5LT UNI with valve and empty protection
CODE OX10070 7LT UNI with valve and empty protection
CODE OX10100 10LT UNI with valve and empty protection
CODE OX10140 14LT UNI with valve and empty protection
CODE OX10041 3LT DIN with valve and empty protection
CODE OX10059 5LT NF with empty protection
CODE OX10063 5LT BS with valve and empty protection
CODE OX10068 5LT DIN with valve and empty protection
CODE OX10079 7LT NF with empty protection
CODE OX10082 7LT UNI with residual valve and empty protection

OX-VA
OXYGEN TANK WITH INTEGRATED PRESSURE REDUCER

CODE OX10007 0,5LT UNI with reduction valve+protection cage
CODE OX10016 2LT UNI with reduction valve cage
CODE OX10017 2LT DIN with reduction valve + cage h45cm
CODE OX10022 2LT with reduction valve+cage goblet h45cm total
CODE OX10027 2LT w/reduction valve adjust. snap+empty protection cage
CODE OX10031 3LT UNI with reduction valve 0-15l/min+empty cage
CODE OX10036 3LT UNI w/reduction valve+cage+socket UNI 9507 empty
CODE OX10053 5LT UNI with reduction valve+empty protection cage
CODE OX10062 5 LT w/reduct. valve cage+demand valve with empty mass
CODE OX10069 7LT NF with reduction valve + empty protection cage
CODE OX10071 7LT UNI with reducing valve + empty protection cage
CODE OX10074 7LT c/val.rid.presa nf-residuale+gab.pro. vuota
CODE OX10083 1LT UNI w/reduced valve + empty cage
CODE OX10106 10LT UNI with reduction valve + protective cage empty
CODE OX10046 2LT NF w/reduction valve + empty 45cm high glass cage

PRESSURE REGULATORS

The pressure regulator connects to the oxygen cylinder and reduces the pressure from 200–220 bar to approximately 4 bar, making the gas safe for use with medical devices. To guarantee a proper and safe connection, the regulator must be compatible with the specific gas cylinder connection standard.

Selecting the most suitable regulator depends on several factors, including:

- Type of gas being used
- Gas-specific connection standard
- Required outlet flow
- Type of outlet connection to the medical device

PRX 08
REDUCER WITH ADJUSTABLE FLOW

Size: 14 x 4 x 9 cm
Flow: 0-1-1,5-2-3-4-6-9-12-15 L/min
Inlet pressure: 200 bar
Outlet pressure: max 4 bar

CODE PR00308 press.red.shots .15 l/mshort-w/cover tub.s.ø6mm UNI
CODE PR00312 press.red.shots .15 l/mlong-w/cover tub.s.ø6mm UNI
CODE PR00316 press.red.shots .15 l/m-w/cover tub.s.ø6mm NF
CODE PR00333 press. red. with dispenser and oxygen inlet UNI 9507
CODE PR00335 press. red. shots 0-15l/m BS cod. long tub.6
CODE PR00343 pres.reg.15l/min BS outlet ø6mm
CODE PR00352 step pressure reducer 0- 15l/m nf with NF O2 outlet
CODE PR00360 press.red. with selector 0- 15 l/m DIN w/hum. and O2 DIN outlet
CODE PR00361 press. red shots 0-15 l/m DIN short w/rubber holder 6mm

PRX 04
PISTON REDUCER WITH FIXED CAPACITY

Size: 10 x 13,5 x 4 cm
Inlet pressure: 200 bar
Outlet pressure: max 4 bar

CODE PR00304 reduction gear pressure piston b 3,5 6l/m.
CODE PR00307 press.red.pist.3,5-140l/mshort-w/cover tub.s.ø7mm UNI
CODE PR00309 piston press. red. UNI b3,5-140l/m-short-w/AFNOR outlet
CODE PR00311 press.red.pist.3,5-140l/mlong-w/cover tub.s.ø7mm
CODE PR00313 press.red.pist.3,5-6l/m-w/cover tub.s.ø6mm NF
CODE PR00315 press.red.pist.3,5-140l/m-w/cover tub.s.ø7mm NF
CODE PR00330 pressure reducer piston 50l/min 3,5bar F1/4 G
CODE PR00331 pressure reducer 140 l/min 3,5 bar NF standard
CODE PR00338 press.red.pist.3,5-6l/mshort-w/cover tub.s.ø7mm BS
CODE PR00339 press.red.pist.3,5-140l/mshort-w/cover tub.s.ø7mm BS
CODE PR00340 press.red.pist.3,5-6l/m-w/cover tub.s.ø7mm DIN
CODE PR00342 press.red.pist.4bar - 140l/min DIN SWEDISH F¼" GAS
CODE PR00344 press.red.pist.b3,5-140l/m-UNI med. air tub. ø7mm
CODE PR00347 press.red.pist.UNI B3,5-140L/m-socket UNI 9507
CODE PR00348 press.red.pist.b3,5-140l/m- PIN INDEX prol. f¼"gas
CODE PR00349 pressure reducer, 4bar - 140l/min DIN standard F1/4'' GAS
CODE PR00356 piston press. red. b3,5-140l/m-short-w/O2 DIN outlet M¼"
CODE PR00368 pist. pressure reducer 3,5 bar - 150l/min w/man. monitox and O2 socket
CODE PR00374 piston press. red.UNI B3,5-140l/m-short-w/AFNOR outlet

MODULAR SYSTEMS

More info

The Spencer medical gas distribution line can be customized and configured to meet the specific needs of each customer. Its modular design allows the identification of the most suitable configurations for different ambulance types, while ensuring full compliance with international standards.

The basic configuration consists mainly of:

1. Terminal unit: outlet of a medical gas distribution line to which the operator makes connections and disconnections. Built on the basis of reference standards (different according to the country of use). It represents the central element of a line and consists of the following elements:
   - Base block: part of the terminal unit connected to the distribution line pipes;
   - Socket: female part of the terminal unit, integral with the base block by means of a gas-specific connection and which contains the gas-specific connection point;
   - Probe: gas-specific male component designed to be accepted and retained by the socket;
2. Exchanger: device that is used in cases where the emergency vehicle is equipped with two cylinders allowing the operator to choose which cylinder to take the gas from. The exchangers do not regulate the gas flow in any way or affect the outlet pressure values.
3. Manometer: for monitoring the operating pressure of the distribution line.

DIFFERENT TYPES OF INSTALLATION

SMOOTH SURFACES FOR EASY CLEANING

OXYGEN AND AIR MEDICAL GASES

MADE OF NYLON, ALUMINIUM, BRASS

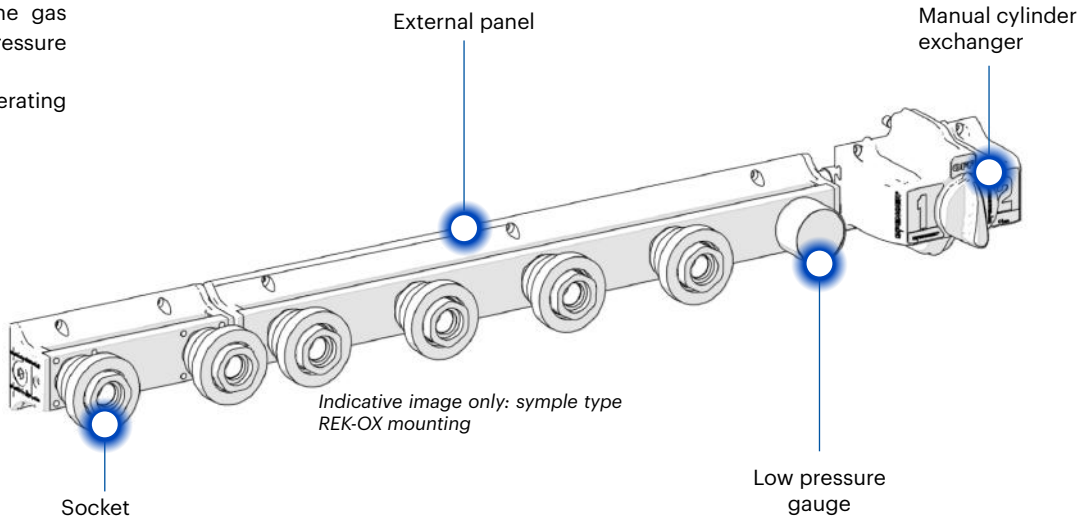

Indicative image only: symple type REK-OX mounting

CODE	MODEL
OX04116	2-way oxygen outlet in aluminum 11S
OX04123	Recessed auxiliary O_2 UNI outlet with 1 m M1/8 hose
OX04124	Recessed auxiliary O_2 NF outlet with 1 m M1/8 hose
OX04125	Medical gas distribution line with 1 recessed O_2 UNI outlet
OX04126	Recessed auxiliary medical air UNI outlet
OX04128	Recessed auxiliary vacuum UNI outlet
OX07017	Silicone tubing 8x13 mm for vacuum
OX07102	REK PRO polyamide clamp with rail 10G
OX07103	REK clamp without rail
OX07104	REK clamp without rail 10G
OX07105	REK HP clamp for 1000 ml jar
OX07106	REK HP clamp for 800 ml jar
OX07117	REK PRO aluminum clamp with rail 10G
OX07122	REK HP clamp for 1000 ml jar 10G
OX07123	REK HP clamp for 800 ml jar 10G

CODE	MODEL
OX07205	REK-OX 2017 ON/OFF diverter
OX07801	REK-OX bar 18 cm with 3 F¼" GAS outlets
OX07803	REK-OX 2-way bar with 2 NF O_2 outlets – 270 mm
OX07804	REK-OX bar with single AFNOR O_2 outlet
OX07811	G-RAIL 1 m bar for clamps
OX07812	G-RAIL 1 m bar for clamps 10G
OX07832	REK-OX 50 cm bar with 3 UNI O_2 outlets + pressure gauge
OX07833	G-RAIL 40 cm bar for clamps 10G
OX07835	REK-OX 46 cm bar with 3 O_2 outlets + 1 air + 1 pressure gauge
OX07935	REK-OX single UNI air outlet bar
OX07951	Auxiliary aluminum UNI O_2 outlet with 4 m hose
OX07965	REK-OX distribution line with 3 UNI O_2 outlets + gauge + switch, without hoses
OX07968	REK-OX line with 3 UNI O_2 outlets + gauge + switch + panel 395x95 mm
OX07973	REK-OX distribution line with 1 UNI air outlet
OX07977	Recessed distribution panel with 3 UNI O_2 outlets + gauge + switch + 2 NF O_2 outlets

Regulating the flow of oxygen to be administered to the patient is a fundamental aspect of respiratory therapy. Based on the clinical picture and, in particular, saturation values, the healthcare provider determines the amount of oxygen to be delivered, using oxygen therapy masks connected to a flowmeter.

To ensure safe and effective administration, it is important to choose the most suitable flowmeter, assessing features such as:

- Modality of flow regulation
- Gas connection standard
- Presence or absence of a humidifier
- Required outflow
- Type of connection to the delivery device

QUALITY SYSTEMS – REFERENCE STANDARDS

EN ISO 11197 Medical supply units.

EN ISO 9170-1
Terminal units for medical gas pipeline systems, Part 1: Terminal units for use with compressed medical gases and vacuum.

EN ISO 18562-1
Biocompatibility evaluation of breathing gas pathways in healthcare applications, Part 1: Evaluation and testing within a risk.

EN ISO 15002
Flow-metering devices for connection to terminal units of medical gas pipeline systems.

FL-X
FLOWWETER/HUMIDIFIER GROUP

Continuous flow 0 to 15 L/min - Input pressure range 400-500 kPa

CODE FL08314 with humidifier UNI oxygen
CODE FL08320 UNI Oxygen
CODE FL08321 NF Oxygen
CODE FL08322 DIN Oxygen
CODE FL08323 BS Oxygen
CODE FL08330 RAIL UNI Oxygen with tube 1 mt
CODE FL08331 RAIL NF Oxygen with tube 1 mt
CODE FL08332 RAIL DIN Oxygen with tube 1 mt
CODE FL08333 RAIL BS Oxygen with tube 1 mt
CODE FL08315 RAIL WITH HUMIDIFIER UNI Oxygen with tube 1 mt
CODE FL08316 WITH HUMIDIFIER NF Oxygen
CODE FL08318 WITH HUMIDIFIER DIN Oxygen
CODE FL08319 WITH HUMIDIFIER BS Oxygen
CODE FL08334 RAIL WITH HUMIDIFIER NF Oxygen with tube 1 mt
CODE FL08335 RAIL WITH HUMIDIFIER DIN Oxygen with tube 1 mt
CODE FL08336 RAIL WITH HUMIDIFIER BS Oxygen with tube 1 mt

FL-K
COMPACT STEP TYPE FLOWMETER/HUMIDIFIRER GROUP

Flow 0-0,5-1-2-3-4-5-6-8-10-12-15 L/min - Input pressure range 400 to 500 kPa

CODE FL10100 UNI Oxygen
CODE FL10120 UNI Oxygen with tube 1 mt
CODE FL10121 UNI Oxygen with tube2 mt
CODE FL10122 UNI Oxygen with tube 3 mt
CODE FL10130 RAIL UNI Oxygen with tube 1 mt
CODE FL10200 NF Oxygen
CODE FL10220 NF Oxygen with tube 1 mt
CODE FL10221 NF Oxygen with tube 2 mt
CODE FL10222 NF Oxygen with tube 3 mt
CODE FL10230 RAIL NF Oxygen with tube 1 mt
CODE FL10300 DIN Oxygen
CODE FL10320 DIN Oxygen with tube 1 mt
CODE FL10321 DIN Oxygen with tube 2 mt
CODE FL10322 DIN Oxygen with tube 3 mt
CODE FL10330 RAIL DIN Oxygen with tube 1 mt
CODE FL10400 BS Oxygen
CODE FL10420 BS Oxygen with tube 1 mt
CODE FL10421 BS Oxygen with tube 2 mt
CODE FL10422 BS Oxygen with tube 3 mt
CODE FL10430 RAIL BS Oxygen with tube 1 mt
CODE FL10110 WITH HUMIDIFIER UNI Oxygen
CODE FL10111 RAIL WITH HUMIDIFIER UNI Oxygen with tube 1 mt
CODE FL10210 WITH HUMIDIFIER NF Oxygen
CODE FL10211 RAIL WITH HUMIDIFIER NF Oxygen with tube 1 mt
CODE FL10310 WITH HUMIDIFIER DIN Oxygen
CODE FL10311 RAIL WITH HUMIDIFIER DIN Oxygen with tube 1 mt
CODE FL10410 WITH HUMIDIFIER BS Oxygen
CODE FL10411 RAIL WITH HUMIDIFIER BS Oxygen with tube 1 mt

SUCTION, AIR, OXYGEN AND VACUUM TUBES

Suction, air, oxygen, and vacuum tubing for medical gas distribution lines in ambulances are designed to ensure safe and controlled delivery during emergencies. Their gas-specific configuration prevents contamination or mixing, allowing healthcare providers to administer oxygen, compressed air, or perform suction reliably and safely, even under critical operational conditions.

S-TUBE / P-TUBE
SUCTION TUBES

CODE OX10103 S-TUBE Ø 5x9 mm
CODE OX10107 S-TUBE Ø 6x10 mm
CODE OX10125 S-TUBE Ø 8x14 mm 1 PACK=10 mt

A-TUBE
MEDICAL AIR TUBES

CODE OX10109 Ø12,7x6,7 EN ISO 5359
CODE OX10131 Ø12,7x6,7 EN ISO 5359 - 50 mt
CODE OX10183 20 cm crimped tube M ¼"G
CODE OX10188 400 cm crimped tube M ¼''GAS
CODE OX10189 300 cm crimped tube M ¼"G
CODE OX10190 650 cm crimped tube M ¼"G
CODE OX10191 200 cm crimped tube M 1/8"G
CODE OX10192 80 cm crimped tube M ¼"G
CODE OX10193 500 cm crimped tube M ¼"G

O-TUBE
NON-TOXIC OXYGEN TUBES

CODE OX10104 Ø12,7x6,7 EN ISO 5359
CODE OX10130 Ø12,7x6,7 EN ISO 5359 - 100 mt
CODE OX10156 20 cm CRIMPED TUBE M ¼"G
CODE OX10157 450 cm CRIMPED TUBE M ¼"G
CODE OX10158 60 cm CRIMPED TUBE M ¼"G
CODE OX10161 150 cm CRIMPED TUBE M ¼" G
CODE OX10162 400 cm CRIMPED TUBE M ¼"G
CODE OX10167 700 cm CRIMPED TUBE M ¼"G
CODE OX10168 600 cm CRIMPED TUBE M ¼"-M1/8"G
CODE OX10169 40 cm crimped tube M ¼"G
CODE OX10172 650 cm crimped tube M ¼"G
CODE OX10173 130 cm crimped tube M ¼"G
CODE OX10174 560 cm crimped tube ¼''G
CODE OX10176 350 cm crimped tube ¼''G
CODE OX10177 90 cm crimped tube ¼''G
CODE OX10178 170 cm crimped tube ¼''G-1/8"G
CODE OX10179 30 cm crimped tube ¼''G-1/8"G
CODE OX10180 50 cm crimped tube ¼''G
CODE OX10181 330 cm crimped tube 1 lato
CODE OX10182 220 cm crimped tube M ¼"G
CODE OX10187 30 cm crimped tube M ¼"G
CODE OX10194 460 cm crimped tube ¼''G-1/8"G
CODE OX10218 20 mt
CODE OX20131 OXX 30 - 10 pieces
CODE OX20140 D-OXX 30 - 2 mt

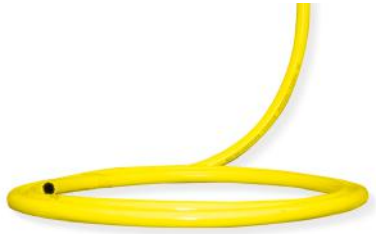

V-TUBE
NON-TOXIC VACUUM TUBES

CODE OX10132 Ø12,7x6,7 EN ISO5359 - 50 mt
CODE OX10151 2,5 mt CRIMPED TUBE M ¼"G
CODE OX10159 1 mt CRIMPED TUBE M ¼"G
CODE OX10163 1,5 mt CRIMPED TUBE M ¼''GAS
CODE OX10164 30 cm CRIMPED TUBE M ¼''GAS
CODE OX10165 2 mt CRIMPED TUBE M ¼''GAS
CODE OX10170 5 mt CRIMPED TUBE M ¼''GAS
CODE OX10214 50 cm CRIMPED TUBE M ¼''GAS
CODE OX10215 2,7 mt CRIMPED TUBE M ¼''GAS

SPENCER
120
140
160
180
200
220
240
260
280
300
100
80
60
40
20
0
mmHg
LOT 1700787
SPENCER
SPENCER
UNI 9507
Ossigeno O2
CAUTION
PUSH TO

FIRST AID AND DIAGNOSTICS

Non-invasive blood pressure measuring device that uses a mechanical dial gauge to indicate pressure. The graduated scale, with markings every 20 mmHg and indicators every 2 mmHg, ensures easy reading. The cuff is equipped with clear indicators of the direction of application, while the durable inflation bulb with screw-adjusting valve ensures precise and controlled inflation.

D-SFIGMOTEK

More info

PALM SPHYGMOMANOMETER FOR ADULT PATIENT

D-SFIGMOTEK is a palm aneroid sphygmomanometer with a one-tube measurement system, designed for reliable and accurate blood pressure monitoring. The metal ring of the sphygmomanometer dial is protected by a rubber belt, while the shape of the cuff and the metal loop prevent unwanted opening, facilitating application.

- **SINGLE-TUBE SYSTEM**
- **RUBBER DIAL PROTECTION**
- **DUAL COLORED GRADUATED SCALE**

D-SISTEMA 3 | D-SISTEMA 5

More info

MULTICUFF SPHYGMOMANOMETER KIT

This kit is supplied with 3 or 5 different size cuffs, a Sfigmotek and a transport case. Each cuff is made of breathable material and is easy to clean and disinfect. In the Sistema 5 kit, the case has two internal dividers with pockets marked with the indication of the intended use of the stored cuff.

- **ADULT AND PAEDIATRIC USE**
- **SINGLE-TUBE SYSTEM**
- **TRANSPORT CASE INCLUDED**

CODE	MODEL	EXTENDED BRACELET SIZES					WEIGHT	GAUGE SCALE	DIAL DIAMETER	MATERIAL
		THIGH	LARGE	ADULT	PAEDIATRIC	INFANT				
DG06035	D-SFIGMOTEK – Adult palm sphygmomanometer	–	–	Width 13,5 cm, circumference from 26 to 36 cm	–	–	440 g	0-300 mmHg	6 cm	Nylon, rubber, Al, Chromed brass
DG06036	D-SISTEMA 3 – Palm sphygmomanometer 3 cuffs	–	60 x 17 cm	53 x 14 cm	34 x 10 cm	–	595 g	0-300 mmHg	6 cm	Nylon, rubber, Al, Chromed brass
DG06037	D-SISTEMA 5 – Palm sphygmomanometer 5 cuffs	75 x 21,5 cm	60 x 17 cm	53 x 14 cm	34 x 10 cm	25 x 8 cm	700 g	0-300 mmHg	6 cm	Nylon, rubber, Al, Chromed brass

D-VISO BUMPER

ANEROID SPHYGMOMANOMETER WITH LARGE DIAL AND PROTECTION AND 10G MOUNTING

More info

D-VISO BUMPER is a high-quality sphygmomanometer ideal for ambulances: its wall bracket is 10G tested, can rotate, is customisable and comes with a wide range of cuff sizes. Made of shock-resistant thermoplastic rubber, it has a 15 to 170 cm long connection tube with a spiral shape.

- **SHOCK-RESISTANT THERMOPLASTIC RUBBER**
- **LONG CONNECTION TUBE**
- **10G WALL BRACKET FOR AMBULANCE**

D-PROFESSIONAL

D-PROFESSIONAL features a single-tube measuring system designed for reliability and ease of use.

- **SINGLE-TUBE SYSTEM**
- **ADULT AND PAEDIATRIC USE**
- **METAL DIAL PROTECTION**
- **NYLON POUCH WITH ZIP CLOSURE INCLUDED**

D-DGX

D-DGX offers accurate measurement thanks to the two-tube system and the durable, easy-to-read metal manometer. The D-DGX 415 model includes a phonendoscope with a steel head and adjustable binaural arc.

- **TWO-TUBE SYSTEM**
- **METAL DIAL PROTECTION**
- **NYLON POUCH WITH ZIP CLOSURE INCLUDED**

CODE	MODEL	EXTENDED BRACELET DIMENSIONS	TUBE LENGTH	SUITABLE FOR CIRCUMFERENCES	KIT WEIGHT	GAUGE SCALE	DIAL DIAMETER	MATERIAL	COLOUR
HS60D-01	D-VISO BUMPER Wall sphygmomanometer	53 x 15 cm	15-170 cm	From 25,4 to 40,6 cm	1,1 kg	0-300 mmHg	13 cm	PE, Nylon, rubber, Al	
HS60D-02	D-VISO BUMPER Wall sphygmomanometer	53 x 15 cm	15-170 cm	From 25,4 to 40,6 cm	1,1 kg	0-300 mmHg	13 cm	PE, Nylon, rubber, Al	
HS60D-03	D-VISO BUMPER Wall sphygmomanometer 10G	53 x 15 cm	15-170 cm	From 25,4 to 40,6 cm	1,1 kg	0-300 mmHg	13 cm	PE, Nylon, rubber, Al	
HS60D-04	D-VISO BUMPER Wall sphygmomanometer 10G	53 x 15 cm	15-170 cm	From 25,4 to 40,6 cm	1,1 kg	0-300 mmHg	13 cm	PE, Nylon, rubber, Al	
DG01514	D-PROFESSIONAL Adult hand-held sphygmomanometer	53 x 14,5 cm	50 cm	From 25,4 to 40,6 cm	320 g	0-300 mmHg	5,8 cm	Nylon, rubber, Al, Chromed brass	
DG01515	D-PROFESSIONAL Paediatric hand-held sphygmomanometer	34 x 10 cm	50 cm	From 18,5 to 27 cm	320 g	0-300 mmHg	5,8 cm	Nylon, rubber, Al, Chromed brass	
DG01436	D-DGX 410 Adult hand-held sphygmomanometer	53 x 15 cm	60 cm	From 25,4 to 40,6 cm	350 g	0-300 mmHg	4,4 cm	Nylon, rubber, Al, Chromed brass	
DG01438	D-DGX 415 Adult hand-held sphygm. with phonendoscope	53 x 15 cm	60 cm	From 25,4 to 40,6 cm	–	0-300 mmHg	4,4 cm	Nylon, rubber, Al, Chromed brass	
DG01437	D-DGX 414 Paediatric hand-held sphygmomanometer	34 X 15 cm	60 cm	From 18,4 to 26,7 cm	285 g	0-300 mmHg	4,4 cm	Nylon, rubber, Al, Chromed brass	

D-DGX 110
BLACK BASIC PHONENDOSCOPE LIGHT AND ULTRA-THIN

D-DGX 110 has a particular diaphragm suitable for the auscultation during blood pressure measurement. Adjustable binaural arch. Single packaging in cardboard box printed using a four-coloured process.

CODE DG02111

D-DGX 111
STETHOSCOPE WITH 2 HEADS WITH BELL AND DIAPHRAGM

DGX 111 is a dual-head stethoscope withbell and diaphragm. Adjustable binaural arch. Single packaging in cardboard box printed using a four-coloured process.

CODE DG02605

D-DGX 280
EXTREMELY LIGHT PAEDIATRIC STETHOSCOPE

Extremely lightweight stethoscope designed for chest auscultation in pediatric patients. Bright coloring to improve interaction with the child.

CODE DG02604

D-DGX 601
BLACK CARDIOLOGICAL PHONENDOSCOPE, SUPPLIED WITH SPARE SOFT EAR-TIPS

Every membrane of the DGX 601 phonendoscope is checked to make sure it will transmit these important cardiac sounds. Special stainless steel flat head, made for the auscultation of low frequency sounds. Single packaging in cardboard box printed using a four-coloured process.

CODE DG02606

D-UNIVERSAL
TUFF CUFF SCISSORS TO CUT BANDAGES, CLOTHES AND BELTS

D-UNIVERSAL scissors are autoclavable. The blades are made of metal and the handles have a thermoplastic coating for maximum comfort during use. The end is designed so that it can be inserted between the bandage and the skin without causing injury.

CODE DG00604
CODE DG00605

MATCH 3
MULTIFUNCTIONAL SCISSORS

MATCH 3 is a compact, multifunctional scissor that guarantees long life and high cutting precision. It can be used not only for cutting clothes and seatbelts, but also as a glass breaker by taking it from the plastic handle that covers the blade. Its plastic holder serves as a wall or floor anchor in any vehicle and as a protective case when inserted into emergency bags or backpacks.

CODE GD02060

MATCH 2 COMPACT
EMERGENCY HAMMER

Compact emergency hammer, used for window breaking and seat belt cutting. A smart, light, compact and efficient instrument that guarantees elementary extrication operations. Easy to position thanks to its fixing system on walls just like a first aid instrument. Single blister package.

CODE GD02040

SICK SACK
VOMIT BAG

SPENCER SICK SACK ergonomically produced to be extremely easy to use, particularly suitable for use during transport. It features a simple and easy anti-reflux valve and a graduated scale to ascertain the quantity collected. Capacity 1000 cc.

CODE GM21222
CODE GM22222 Kit 12 pieces

RDG
GLOVE DISPENSER

CODE FG04570 white

GLOVEX
DISPOSABLE LATEX GLOVES PACK

CODE DR10390 (100 pieces) – Size S
CODE DR10391 (100 pieces) – Size M
CODE DR10392 (100 pieces) – Size L

N-GLOVES
DISPOSABLE NITRIL GLOVES PACK

CODE DR10367 (100 pieces) – Size S
CODE DR10368 (100 pieces) – Size M
CODE DR10369 (100 pieces) – Size L

HT
ISOTHERMAL EMERGENCY BLANKET

Open sheet size 220 x 160 cm.
Folded size 9 x 14 cm approx.
CODE ST00630

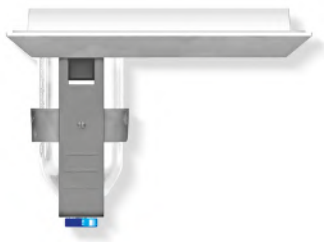

TRACK 6
BUILT IN IV-BOTTLE HOLDER IN POLYAMIDE

This minimal support system is made of polyamide material, opens easily, and withstands up to 10 G. Four bottles can be fixed to the Twin version.

TRACK 8
COMPACT IV-BOTTLE HOLDER IN POLYAMIDE

A compact support system made of polyamide material that opens easily and withstands up to 10 G. The internal chassis contains the fixation system.

TRACK 9
IV-BOTTLE HOLDER FOR RECESSED MOUNTING

Device intended to support and protect the containers of medicinal substances administered to the patient by venous infusion. Allows a significant reduction of the oscillations that may damage the containers of liquids.

TRACK 11
COMPACT IV-BOTTLE HOLDER IN ALUMINIUM

The reduced dimensions of this support system makes the application very easy. It's made of aluminium, it opens easily and withstands up to 10 G. The internal chassis contains the fixation system.

CODE	MODEL	DIMENSION FOLDED	DIMENSION OPEN	DIMENSION RECESSED	MATERIAL	LOAD CAPACITY
IF01050	TRACK 6 10G-Certified Recessed IV Pole	28 x 15 x 4 cm	28 x 15 x 18 cm	24 x 11 x 2 cm	Nylon	0,5 kg
IF01062	TRACK 6 TWIN 10G-Certified External IV Pole	28 x 15 x 4 cm	28 x 15 x 18 cm	24 x 11 x 2 cm	Nylon	1 kg
IF01060	TRACK 6 TWIN 10G-Certified Recessed IV Pole	28 x 15 x 4 cm	28 x 15 x 18 cm	24 x 11 x 2 cm	Nylon	1 kg
IF01052	TRACK 8 10G-Certified IV Pole	24 x 6,8 x 4,5 cm	21,5 x 6,8 x 10 cm	–	Nylon, steel	0,5 kg
IF01054	TRACK 9 Aluminium Recessed IV Pole	26 x 13 x 1 cm	26 x 13 x 18 cm	22,6x9,5x2,5 cm	Aluminium, steel, nylon	0,5 kg
IF01061	TRACK 11 Aluminium compact IV Pole	21 x 11 x 2,7 cm	5 x 12 x 18 cm	–	Aluminium, steel	0,5 kg

ENERGY

THERMOREGULATED BAG FOR HEATING VENOUS INFUSIONS

ENERGY is a thermoregulated bag designed for use in ambulances, intended for warming intravenous saline solutions to reduce the effects caused by the infusion of fluids at temperatures below body temperature. The device heats the liquid to a temperature between 37°C and 41°C and comes with a car cigarette lighter plug for powering the device inside the vehicle.

It features internal hooks inside the bag for securing the fluid bags to be warmed (max. 2 × 500 ml).

The bag design, featuring dedicated pass-through openings, allows the infusion procedure to be performed without removing the bags from the device.

More info

- **PORTABLE SYSTEM WITH CARRYING HANDLE**
- **MAX. 2 × 500 ML FLUID BAGS TO BE WARMED**
- **VISUAL AND AUDIBLE ALARMS FOR DEVICE MONITORING**

ACCESSORIES

CODE	MODEL
IF03034	10G Fixing system for Energy thermo-regulated bag for ambulance use

WIV

IV SUBMINISTRATION BAG

WIV is an intravenous infusion bag designed for use with 500 or 1000 ml IV infusion bags. It allows pressure to be applied to the infusion bag in order to empty the bag inside.

More info

- **500 OR 1000 ML IV PLASMA BAGS**
- **IV INFUSION STORAGE POCKET (TRANSPARENT)**
- **TOP EYELET FOR HANGING ON STANDARD IV POLE**

CODE	MODEL	DIMENSION	LENGTH OF PRESSURE GAUGE TUBE/ INFLATION TUBE	PRESSURE GAUGE SCALE	MAXIMUM APPLICABLE PRESSURE	Ø PRESSURE GAUGE	POWER SUPPLY	POWER CONSUMPTION	WEIGHT	MATERIAL	COLOUR
IF03030	ENERGY Thermostatically regulated bag for heating venous infusion	25 x 33,5 x 14,2 cm	–	–	–	–	12-15 Vdc	45 Watt	1 kg	Nylon, PVC, ABS, PP	
IF00301	WIV IV subministration bag	37 x 18 cm	19 cm	0-300 mmHg (division every 2 mmHg)	250 mmHg	5 cm	–	–	320 g	Nylon, PVC, Al, Chromed-plated brass	

EMERGENCY BAGS

LIFEBAGS S | M

EMERGENCY BAGS

LIFEBAGS S-M are a spacious, water-repellent emergency bags available in two sizes and colors, designed to carry a wide range of rescue equipment.

Featuring practical compartments, MOLLE-compatible side pockets, and multiple internal dividers, it ensures optimal organization. Additional elements include a transparent front insert for labeling, a document pocket inside the lid, a large external zippered pocket, and elastic loops for securing small items. A Velcro® strip on the back enables further customization with identification patch.

- **DURABLE AND WATERPROOF MATERIAL**
- **SHOULDER STRAP LENGTH 103-133 CM**
- **LARGE MAIN COMPARTMENT IS DIVIDED INTO SMALLER SECTIONS**
- **MOLLE SYSTEM ON THE SIDE POCKETS**

LIFEBAGS L | XL

EMERGENCY BACKPACKS

LIFEBAG L and LIFEBAG XL are professional emergency backpacks designed to provide optimal organization, quick access to essential equipment and documents, ergonomic comfort and high visibility in all operating conditions. Their internal structure features dividers, elastic loops, and Velcro® strips that ensure a convenient and secure arrangement of tools and allow attachment of internal bags. Both offer ample storage space and include additional elements such as a center divider with elastic loops of various sizes and compartments for detailed organization.

LIFEBAGS XL also has a dedicated document compartment with side access and is complete with 6 color-coded inner bags. The slightly more compact LIFEBAGS L comes complete with 5 color-coded inner bags.

- **DURABLE AND WATERPROOF MATERIAL**
- **DIFFERENT CAPACITY AND SPECIFIC INTERNAL CONFIGURATIONS**
- **INNER BAGS SET INCLUDED**

CODE	MODEL	DIMENSION	SIZE	WEIGHT	MATERIAL	COLOUR	OUTSIDE POCKETS	INNER BAGS INCLUDED	REFLECTIVE ELEMENT	SHOULDER STRAP
0405053	Lifebags S 1FT 2ST	43 x 30 x 20 cm	S	1,2 kg	PES with PVC coating	Red	Top, front and 2 lateral	–	✔	✔
0405054	Lifebags S 1FT 2ST	43 x 30 x 20 cm	S	1,2 kg	PES with PVC coating	Blue	Top, front and 2 lateral	–	✔	✔
0405050	Lifebags M 1FT 2ST	49 x 30 x 28 cm	M	1,6 kg	PES with PVC coating	Red	Top, front and 2 lateral	–	✔	✔
0405051	Lifebags M 1FT 2ST	49 x 30 x 28 cm	M	1,6 kg	PES with PVC coating	Blue	Top, front and 2 lateral	–	✔	✔
0406605	Lifebags L 2FT 2ST 5IT	34 x 47 x 22 cm	L	2,2 kg	PES with PVC coating	Red	2 Front and 2 lateral	1 green, 1 orange, 1 red, 1 yellow, 1 blue	✔	–
0406606	Lifebags L 2FT 2ST 5IT	34 x 47 x 22 cm	L	2,2 kg	PES with PVC coating	Blue	2 Front and 2 lateral	1 green, 1 orange, 1 red, 1 yellow, 1 blue	✔	–
0406610	Lifebags XL 2FT 3ST 6IT	44 x 52 x 24 cm	XL	4,7 kg	PES with PVC coating	Red	2 Front and 3 lateral	1 green, 1 orange, 1 red, 1 yellow, 2 blue	✔	–
0406611	Lifebags XL 2FT 3ST 6IT	44 x 52 x 24 cm	XL	4,7 kg	PES with PVC coating	Blue	2 Front and 3 lateral	1 green, 1 orange, 1 red, 1 yellow, 2 blue	✔	–

PAX FIRST RESPONDER

More info

FIRST AID COMPACT EMERGENCY BAG

PAX FIRST RESPONDER is a compact emergency bag designed to carry all essential first aid supplies. The main compartment, equipped with a separate zipper and a flap secured with buckles, offers ample space for medical equipment such as resuscitation bags, masks, IV fluids, and accessories.

Inside, both the flap and rear wall feature flat zippered pockets and loops for securing venous catheters. Two internal zippered side pockets, protected by the main flap when closed, can accommodate additional equipment.

On the outside, two more zippered side pockets offer extra storage space for dressings or the PAX Pro Series Ampoule Kit 9.

** The bag is supplied empty.*

- **REINFORCED HANDLE ENSURES OPTIMAL WEIGHT DISTRIBUTION**
- **EQUIPPED WITH ELASTIC LOOPS**
- **ERGONOMIC SHOULDER STRAP INCLUDED**

PAX ESSEN

PROFESSIONAL RESCUE EMERGENCY BAG

PAX ESSEN is a compact emergency bag designed to hold all essential first aid supplies. The main compartment, featuring a separate zipper and a flap-style lid secured with buckles, provides ample space for medical equipment such as resuscitation bags, masks, IV supplies, and accessories. An internal divider ensures practical organization and added stability for the bag's contents.

Inside, both the lid and the rear panel are equipped with flat zippered pockets and elastic loops for securely holding venous catheters. Two side pockets, protected by the outer flap when the bag is closed, can accommodate additional equipment.

On the outside, two more side pockets offer space for dressings or the PAX XS ampoule holder. The ergonomic shoulder strap and bi-directional zippers (Easy-Zip It's) facilitate transport and enhance comfort, while the carry handle ensures optimal weight distribution at all times.

** The bag is supplied empty.*

- **REINFORCED HANDLE ENSURES OPTIMAL WEIGHT DISTRIBUTION**
- **EQUIPPED WITH A DIVIDER AND ELASTIC LOOPS**
- **ERGONOMIC SHOULDER STRAP INCLUDED**

CODE	MODEL	DIMENSIONS	WEIGHT	VOLUME	MATERIAL	COLOUR	OUTSIDE POCKETS	RIVETED FEET	FLAP-STYLE LID	EASY-ZIP IT'S ZIPPERS	REFLECTIVE ELEMENT	SHOULDER STRAP
200620201	PAX FIRST RESPONDER	25,5 x 40 x 22 cm	1 kg	22,4 L	PAX-Plan	🔴	2 Lateral	✔	✔	✔	✔	✔
200630201	PAX ESSEN	48 x 25,5 x 24 cm	1,43 kg	29 L	PAX-Plan	🔴	2 Lateral	✔	✔	✔	✔	✔
200630208	PAX ESSEN	48 x 25,5 x 24 cm	1,43 kg	29 L	PAX-Plan	🟡	2 Lateral	✔	✔	✔	✔	✔

PAX OLDENBURG

More info

PROFESSIONAL RESCUE EMERGENCY BAG WITHOUT VELCRO®

PAX OLDENBURG is a spacious emergency bag designed for professional responders, entirely free of Velcro®, and capable of holding a comprehensive basic equipment set.

The main compartment features removable internal dividers, allowing for efficient organization of medical supplies, while the front and rear pockets include variable compartments for quick access, with rows of loops suitable for venous catheters and other accessories. The side pockets are ideal for storing infusions or the PAX XS or S ampoule holder.

The absence of Velcro® in the customizable interior configuration enhances ease of disinfection. Thanks to its rounded design, the side and external pockets do not touch the ground, even when fully loaded.

- **DOUBLE-WALLED FOAM TO KEEP SHAPE EVEN WHEN NOT FULLY**
- **EQUIPPED WITH ELASTIC LOOPS**
- **ERGONOMIC SHOULDER STRAP INCLUDED**

PAX PAEDIATRIC

More info

FULLY PADDED PAEDIATRIC EMERGENCY BAG

PAX PAEDIATRIC EMERGENCY BAG is a compact, fully padded, reinforced, and waterproof emergency bag specifically designed for paediatric care.

Inside, removable dividers, Velcro® strips, color-coded PAX inner pouches, and a measuring tape provide functionality and customization, allowing emergency equipment to be organized according to the patient's age and size. Two resuscitation bags, intubation equipment, and IV supplies can be stored either in the main compartment or in the side pockets.

- **FULLY PADDED, REINFORCED, WATERPROOF**
- **EQUIPPED WITH DIVIDERS AND ELASTIC LOOPS**
- **ERGONOMIC SHOULDER STRAP INCLUDED**
- **BTM 9 AMPOULE HOLDER INCLUDED**
- **7 COLOR-CODED PAX INNER POUCHES INCLUDED**

CODE	MODEL	DIMENSIONS	WEIGHT	VOLUME	MATERIAL	COLOUR	OUTSIDE POCKETS	REINFORCED HANDLE	RIVETED FEET	EASY-ZIP IT'S ZIPPERS	REFLECTIVE ELEMENT	SHOULDER STRAP
200650301S	PAX OLDENBURG	32,5 x 58,5 x 36,5 cm	1,9 kg	69 L	PAX-Tec	🔴	Front and lateral	Top	✔	✔	✔	✔
200650308S	PAX OLDENBURG	32,5 x 58,5 x 36,5 cm	1,9 kg	69 L	PAX-Tec	🔴	Front and lateral	Top	✔	✔	✔	✔
200690301	PAX PAEDIATRIC	31 x 62 x 22 cm	1 kg	53,7 L	PAX-Tec	🔴	Lateral	Top	✔	✔	✔	✔
200690308	PAX PAEDIATRIC	31 x 62 x 22 cm	1 kg	53,7 L	PAX-Tec	🟡	Lateral	Top	✔	✔	✔	✔

PAX TRAUMA BAG

COMPACT BAG FOR KED, SAM SPLINT AND PELVIC SLING

TRAUMA BAG is a compact bag for KED, SAM Splint and pelvic sling, as well as cervical collars of different sizes.

- **INSIDE POCKET WITH ZIP CLOSURE**
- **REAR EXTERNAL POCKET WITH VELCRO® CLOSURE**

PAX BERLIN

COMPACT EMERGENCY BACKPACK WITH INTEGRATED FRONT POCKETS

More info

PAX BERLIN is a backpack specifically designed for daily use in emergency services. Available in various materials and colors, it allows for customizable configurations using PAX internal pouches and color-coded center panels, removable dividers, and ampoule holders — all of which can be integrated into the main compartment.

To maintain a slim profile, the front pockets have been integrated into the interior of the backpack. It opens from the outside via a dual zipper, while the front pocket can also be accessed from the inside. When needed, it is possible to reach the main compartment through the front pocket without fully opening the backpack.

- **FRONT POCKETS ACCESSIBLE FROM INSIDE**
- **VELCRO® ATTACHMENT SYSTEM FOR INTERNAL CONFIGURATION**
- **EQUIPPED WITH ELASTIC LOOPS**

CODE	MODEL	ATTACHMENT SYSTEM	DIMENSION	WEIGHT	VOLUME	MATERIAL	COLOUR	EASY-ZIP IT'S ZIPPERS	RIVETED FEET	REINFORCED HANDLE	REFLECTIVE ELEMENT	PADDED SHOULDER AND BACK SUPPORT
200560207	PAX TRAUMA BAG	–	81 x 25 x 12 cm	1 kg	21 L	PAX-Plan		✔	–	–	–	–
200290208	PAX BERLIN	Velcro®	56,5 x 39 x 25,5 cm	2,87 kg	56 L	PAX-Tec		✔	✔	Top and lateral	✔	✔
200290301	PAX BERLIN	Velcro®	56,5 x 39 x 25,5 cm	2,87 kg	57 L	PAX-Tec		✔	✔	Top and lateral	✔	✔
200290307	PAX BERLIN	Velcro®	56,5 x 39 x 25,5 cm	2,87 kg	58 L	PAX-Tec		✔	✔	Top and lateral	✔	✔

PAX P5/11 2.0 SERIES

Emergency backpack specifically designed for daily use in rescue services, featuring a robust, smooth, and easy-to-clean surface. Its squared design with reinforced corners allows for customized configurations tailored to specific applications such as diagnostics, intubation, oxygen transport, or air rescue. Internally configurable with inner pouches, central panels featuring additional small transparent pockets, fixed or adjustable loops, or a combination of loops and pockets. Fully openable, this backpack includes an attachment system using either magnets or safety flaps to securely fasten the selected internal configuration.

PAX P5/11 2.0

More info

EMERGENCY BACKPACK WITH INTEGRATED MAGNETS

Available in sizes M, L, and XL, the PAX P5/11 2.0 backpack meets various space requirements depending on the intended application. All sizes maintain the same height and width, differing only in depth.

- **DESIGNED WITH SMOOTHED CORNERS**
- **EASY SANITATION**
- **FULLY OPENING**
- **MAGNET OR FLAPS ATTACHMENT SYSTEM FOR INTERNAL CONFIGURATION**

PAX P5/11 2.0 XL AIR AMBULANCE

More info

AIR AMBULANCE EMERGENCY BACKPACK

Emergency backpack in size XL from the P5/11 2.0 series, specially developed for air rescue. Available in various colors and compatible with the PAX waist belt P5/11 2.0.

- **SPECIFICALLY DESIGNED FOR AIR RESCUE**
- **DESIGNED WITH SMOOTHED CORNERS**
- **EASY SANITATION**
- **FULLY OPENING**
- **FLAPS ATTACHMENT SYSTEM FOR INTERNAL CONFIGURATION**

CODE	MODEL	ATTACHMENT SYSTEM	DIMENSIONS	WEIGHT	VOLUME	MATERIAL	COLOUR	EASY-ZIP IT'S ZIPPERS	RIVETED FEET	REINFORCED HANDLE	REFLECTIVE ELEMENT	PADDED SHOULDER AND BACK SUPPORT
276030301	PAX P5/11 2.0 - L MAGNET	Magnet	52,5 x 40 x 23 cm	3,2 kg	45,7 L	PAX-Tec		✔	✔	Top and lateral	✔	✔
276030307	PAX P5/11 2.0 - L MAGNET	Magnet	52,5 x 40 x 23 cm	3,2 kg	45,7 L	PAX-Tec		✔	✔	Top and lateral	✔	✔
276030309	PAX P5/11 2.0 - L MAGNET	Magnet	52,5 x 40 x 23 cm	3,2 kg	45,7 L	PAX-Tec		✔	✔	Top and lateral	✔	✔
276034501	PAX P5/11 2.0 – L	Flaps	52,5 x 40 x 23 cm	3,2 kg	45,7 L	PAX-Rip-Tec		✔	✔	Top and lateral	✔	✔
278554501	PAX P5/11 2.0 - XL Air ambulance	Flaps	52,5 x 40 x 23 cm	3,36 kg	50 L	PAX-Rip-Tec		✔	✔	Top and lateral	✔	✔
278554508	PAX P5/11 2.0 - XL Air ambulance	Flaps	52,5 x 40 x 23 cm	3,36 kg	51 L	PAX-Rip-Tec		✔	✔	Top and lateral	✔	✔

PAX WASSERKUPPE SERIES

HIGHLY CONFIGURABLE RESCUE BACKPACK

PAX WASSERKUPPE is an emergency backpack specifically designed for daily use in rescue services. It offers a wide range of functional and customizable features to meet specific needs and adapt to various operational scenarios.

Spacious main compartment, fully openable thanks to the Easy Zip It's zipper, allows for efficient organization and transport of a comprehensive set of equipment. Inside, color-coded elastic loops and side pockets (red for circulation equipment, blue for airway management tools) ensure quick and easy access to essential rescue supplies.

PAX WASSERKUPPE is available, depending on the model, with:

- Different colours, sizes and materials,
- External front and/or side pockets
- Flat neck brace compartment
- Document compartment
- Flexible and modular internal configuration with PAX pouches options, colour-coded central panels, removable dividers and ampoule holders.

FULLY OPENING

VELCRO® ATTACHMENT SYSTEM FOR INTERNAL CONFIGURATION

EQUIPPED WITH ELASTIC LOOPS

More info

WASSERKUPPE L BASIC CONFIGURATION

BASE MODEL OF THE PROVEN PAX WASSERKUPPE SERIES

IDEAL FOR TWO-BACKPACK SYSTEM SETUPS

CODE	MODEL	ATTACHMENT SYSTEM	DIMENSIONS	WEIGHT	VOLUME	MATERIAL	COLOUR	OUTSIDE POCKETS	EASY-ZIP IT'S ZIPPERS	RIVETED FEET	REINFORCED HANDLE	REFLECTIVE ELEMENT	PADDED SHOULDER AND BACK SUPPORT
200050301	PAX WASSERKUPPE L	Velcro®	57 x 42 x 23 cm	2,5 kg	38,9 L	PAX-Tec	Red	0	✔	✔	Top and lateral	✔	✔
200050307	PAX WASSERKUPPE L	Velcro®	57 x 42 x 23 cm	2,5 kg	38,9 L	PAX-Tec	Blue	0	✔	✔	Top and lateral	✔	✔
200050308	PAX WASSERKUPPE L	Velcro®	57 x 42 x 23 cm	2,5 kg	38,9 L	PAX-Tec	Yellow	0	✔	✔	Top and lateral	✔	✔
200100301	PAX WASSERKUPPE L-FT	Velcro®	57 x 42 x 32,5 cm	3 kg	47,7 L	PAX-Tec	Red	1 Frontal	✔	✔	Top and lateral	✔	✔
200100307	PAX WASSERKUPPE L-FT	Velcro®	57 x 42 x 32,5 cm	3 kg	47,7 L	PAX-Tec	Blue	1 Frontal	✔	✔	Top and lateral	✔	✔
200120208	PAX WASSERKUPPE L-FT2	Velcro®	57 x 42 x 32,5 cm	3,43 kg	56,55 L	PAX-Plan	Yellow	2 Frontal	✔	✔	Top and lateral	✔	✔
200120301	PAX WASSERKUPPE L-FT2	Velcro®	57 x 42 x 32,5 cm	3,43 kg	56,55 L	PAX-Tec	Red	2 Frontal	✔	✔	Top and lateral	✔	✔
200120307	PAX WASSERKUPPE L-FT2	Velcro®	57 x 42 x 32,5 cm	3,43 kg	56,55 L	PAX-Tec	Blue	2 Frontal	✔	✔	Top and lateral	✔	✔
200000301	PAX WASSERKUPPE L-ST-FT	Velcro®	57 x 58 x 32,5 cm	3,15 kg	53 L	PAX-Tec	Red	1 Frontal, 3 Lateral	✔	✔	Top and lateral	✔	✔
200000307	PAX WASSERKUPPE L-ST-FT	Velcro®	57 x 58 x 32,5 cm	3,15 kg	54 L	PAX-Tec	Blue	1 Frontal, 3 Lateral	✔	✔	Top and lateral	✔	✔
200190301	PAX WASSERKUPPE L-ST-FT2	Velcro®	57 x 42 x 32,5 cm	3,5 kg	61,9 L	PAX-Tec	Red	2 Frontal, 3 Lateral	✔	✔	Top and lateral	✔	✔
200190311	PAX WASSERKUPPE L-ST-FT2	Velcro®	57 x 58 x 32,5 cm	3,5 kg	61,9 L	PAX-Tec	Green	2 Frontal, 3 Lateral	✔	✔	Top and lateral	✔	✔
200194501	PAX WASSERKUPPE L-ST-FT2	Velcro®	57 x 58 x 32,5 cm	3,5 kg	61,9 L	PAX-Rip-Tec	Red	2 Frontal, 3 Lateral	✔	✔	Top and lateral	✔	✔
200210301	PAX WASSERKUPPE L-FT2 TROLLEY	Velcro®	60 x 42 x 36 cm	5,2 kg	84 L	PAX-Tec	Red	2 Frontal	✔	✔	Top and lateral	✔	✔

PAX RAPID RESPONSE TEAM

More info

EMERGENCY FIRST AID BACKPACK

PAX RAPID RESPONSE TEAM is a compact, durable and customisable emergency backpack designed for first responders and MANV scenarios.
Available in size S and L, it allows configurations with options for sets of PAX modules such as color-coded pouches and center panels, ampoule holders, and removable dividers.

- **UNIVERSAL DESIGN FOR VARIOUS SCENARIOS**
- **VELCRO® ATTACHMENT SYSTEM FOR INTERNAL CONFIGURATION**
- **EQUIPPED WITH ELASTIC LOOPS**
- **INCLUDES THE INNER POUCH SET 1 - WELDED**

PAX FLIGHT MEDIC

EMERGENCY BACKPACK FOR AVIATION

PAX FLIGHT MEDIC is a high-performance emergency backpack with a tall and narrow design, specifically engineered for use in aircraft and mountain rescue operations.

It offers efficient and versatile internal organization. Inside, optional modular PAX pouches can be attached to the pre-positioned Velcro® strips for flexible arrangement.

Depending on the size (M or L), it can be equipped with external side pockets featuring integrated elastic loops, providing additional space for operational equipment.

- **TOP COMPARTMENT ACCESSIBLE FROM BOTH OUTSIDE AND INSIDE**
- **FULL-PERIMETER ZIPPER**
- **VELCRO® ATTACHMENT SYSTEM FOR INTERNAL CONFIGURATION**
- **EQUIPPED WITH ELASTIC LOOPS**

CODE	MODEL	ATTACHMENT SYSTEM	DIMENSIONS	WEIGHT	VOLUME	MATERIAL	COLOUR	OUTSIDE POCKETS	EASY-ZIP IT'S ZIPPERS	RIVETED FEET	REINFORCED HANDLE	REFLECTIVE ELEMENT	PADDED SHOULDER AND BACK SUPPORT
200420201S	PAX RAPID RESPONSE TEAM S	Velcro®	44 x 29,5 x 22,5 cm	1,36 kg	29,2 L	PAX-Plan		0	✔	✔	Top	✔	✔
200420207S	PAX RAPID RESPONSE TEAM S	Velcro®	44 x 29,5 x 22,5 cm	1,36 kg	29,2 L	PAX-Plan		0	✔	✔	Top	✔	✔
200420208S	PAX RAPID RESPONSE TEAM S	Velcro®	44 x 29,5 x 22,5 cm	1,36 kg	29,2 L	PAX-Plan		0	✔	✔	Top	✔	✔
200430201S	PAX RAPID RESPONSE TEAM L	Velcro®	47 x 35 x 19 cm	1,65 kg	31,2 L	PAX-Plan		0	✔	✔	Top	✔	✔
200430207S	PAX RAPID RESPONSE TEAM L	Velcro®	47 x 35 x 19 cm	1,65 kg	31,2 L	PAX-Plan		0	✔	✔	Top	✔	✔
200430208S	PAX RAPID RESPONSE TEAM L	Velcro®	47 x 35 x 19 cm	1,65 kg	31,2 L	PAX-Plan		0	✔	✔	Top	✔	✔
243804501	PAX FLIGHT MEDIC M	Velcro®	59 x 35,5 x 26,5 cm	1,95 kg	–	PAX-Rip-Tec		0	✔	✔	Top	✔	✔
245944501	PAX FLIGHT MEDIC L	Velcro®	59 x 51 x 25 cm	2,22 kg	75,2 L	PAX-Rip-Tec		2 Lateral	✔	✔	Top	✔	✔

PAX FELDBERG SAN

More info

COMPACT AND LIGHTWEIGHT EMERGENCY BACKPACK

PAX FELDBERG SAN is a compact, durable and customisable emergency backpack, ideal for rescue professionals. The main compartment offers efficient organisation of medical supplies, such as bandages and plasters, thanks to the flexible arrangement of optional PAX inner pouches and dividers, which can be variably attached using Velcro® strips. Includes flexible, removable PAX Feldberg divider.

- **VELCRO® ATTACHMENT SYSTEM FOR INTERNAL CONFIGURATION**
- **PAX FELDBERG DIVIDER INCLUDED**

PAX FELDBERG AED

More info

COMPACT EMERGENCY BACKPACK WITH FRONT POCKET FOR AED

FELDBERG AED is a compact, durable and customizable emergency backpack, ideal for rescue service professionals. Specifically designed to house and carry an automated external defibrillator, ensuring immediate access to life-saving equipment during emergencies.

The main compartment offers efficient organisation of medical supplies, such as bandages and plasters, thanks to the flexible arrangement of optional PAX inner pouches and dividers, which can be variably attached using Velcro® strips. Includes flexible, removable PAX Feldberg divider.

- **SPECIFICALLY DESIGNED FOR AN AED**
- **VELCRO® ATTACHMENT SYSTEM FOR INTERNAL CONFIGURATION**
- **PAX FELDBERG DIVIDERS INCLUDED**

CODE	MODEL	ATTACHMENT SYSTEM	DIMENSIONS	WEIGHT	VOLUME	MATERIAL	COLOUR	OUTSIDE POCKETS	EASY-ZIP IT'S ZIPPERS	RIVETED FEET	REINFORCED HANDLE	REFLECTIVE ELEMENT	PADDED SHOULDER AND BACK SUPPORT
200370301	PAX FELDBERG SAN	Velcro®	48 x 39 x 22 cm	2,3 kg	41,2 L	PAX-Tec	🔴	0	✔	✔	Top and lateral	✔	✔
200370307	PAX FELDBERG SAN	Velcro®	48 x 39 x 22 cm	2,3 kg	41,2 L	PAX-Tec	🔵	0	✔	✔	Top and lateral	✔	✔
200370308	PAX FELDBERG SAN	Velcro®	48 x 39 x 22 cm	2,3 kg	41,2 L	PAX-Tec	🟡	0	✔	✔	Top and lateral	✔	✔
200370311	PAX FELDBERG SAN	Velcro®	48 x 39 x 22 cm	2,3 kg	41,2 L	PAX-Tec	🟢	0	✔	✔	Top and lateral	✔	✔
200400301	PAX FELDBERG AED	Velcro®	48 x 39 x 31,5 cm	2,82 kg	43 L	PAX-Tec	🔴	1 Frontal	✔	✔	Top and lateral	✔	✔

PAX MT. MCKINLEY

ALPINE OFF-ROAD EMERGENCY RESCUE BACKPACK

PAX MT. MCKINLEY is an emergency backpack specifically designed for professional alpine rescue. Built for durability and prolonged use in demanding conditions, it features spacious compartments for organizing medical or recovery equipment.

The "V" carry system, reinforced with aluminum stabilizers, effectively redistributes weight onto the padded, non-slip PAX-Grip waist belt, enhancing carrying comfort. A large front pocket is designed to hold carabiners, an avalanche shovel, and a probe.

- **VELCRO® ATTACHMENT SYSTEM FOR INTERNAL CONFIGURATION**
- **PAX-LON REINFORCEMENT ON THE BOTTOM**
- **PAX MOUNT MCKINLEY POUCHES INCLUDED**

PAX HEIGHT MATERIAL RESCUE

HIGH-ALTITUDE RESCUE EMERGENCY BACKPACK

PAX HEIGHT RESCUE MATERIAL is a compact backpack specifically designed for high-altitude rescue operations. Equipped with ergonomic shoulder straps and back belts, it ensures comfortable transport even under heavy loads.

Inside, the main compartment and additional pockets can store carabiners and other gear, while a removable divider allows for organized storage of harnesses, rope protectors, and other essential equipment. A convenient changing mat is also included, ideal for organizing gear or putting on the harness directly on-site.

- **SUITABLE FOR ABSEILING**
- **CHANGING MAT INCLUDED**
- **COMFORTABLE TRANSPORT EVEN UNDER HEAVY LOADS**

CODE	MODEL	DIMENSIONS	WEIGHT	VOLUME	MATERIAL	COLOUR	EASY-ZIP IT'S ZIPPERS	REFLECTIVE ELEMENT	PADDED SHOULDER AND BACK SUPPORT
200350101	PAX MT. MCKINLEY	60 x 37 x 31 cm	3,35 kg	38 L	PAX-Dura	●	✔	✔	✔
139810301	PAX HEIGHT RESCUE MATERIAL	59 x 34 x 18 cm	3,2 kg	36,1 L	PAX-Tec	●	✔	✔	✔

PAX FELDBERG DIVIDERS

Divider module attachable via Velcro®, suitable for the PAX Patrouilleur S 2.0 backpack.

CODE 102640310 PAX-Tec material

PAX WASSERKUPPE DIVIDER SET

Divider module attachable via Velcro®, compatible with the PAX Wasserkuppe backpack.

CODE 165820310 PAX-Tec material

PAX WASSERKUPPE CENTRE PANEL INFUSION/INTUBATION

Central divider panel designed to hold intubation equipment.

Dimensions 33,5 x 48 x 9,5 cm
Capacity 15,2 L

CODE 206260310 PAX-Tec material

PAX CENTRE PANEL WK AMPOULE KIT - PCI

Central intubation divider panel featuring the PAX clip-in system and transparent pockets for syringes, cannulas or aerosol devices, and vials.

Dimensions 34 x 48 x 7 cm

CODE 162490310 PAX-Tec material

PAX CENTRAL PARTITION AMPOULE HOLDER

Central divider panel for ampoules, featuring multiple transparent pockets of various sizes for syringes, cannulas, and capillary blood lancets.

A removable support plate allows for the attachment of various ampoule holders or the PAX Clip-In System (PCI).

Dimensions 24,5 x 48 x 10 cm.

CODE 202180310 PAX-Tec material

PAX WASSERKUPPE CENTER PANEL MODULE

Central intubation divider panel with double-sided Velcro® surfaces and internal transparent pockets.

Dimensions 34 x 48 x 7 cm.

CODE 202200310 PAX-Tec material

PAX CENTRAL PARTITION P5/11 2.0 XL - CIRCULATION

Central wall with rubber loops and transparent pockets in the XL version, attachable inside the backpack via loops. Can be individually configured and used.

Dimensions 36 x 48 x 5 cm.

CODE 278730310 PAX-Tec material

PAX CENTRAL PARTITION P5/11 2.0 XL - AIRWAY

XL Airway central divider, attachable inside the backpack via loops. Can be individually configured and equipped.

Dimensions 36 x 48 x 5 cm.

CODE 278720310 PAX-Tec material

PAX CENTRAL PARTITION P5/11 2.0 XL - INTUBATION

Central divider with loops and transparent pockets for the XL version, also usable as a lid. Optional rows of rubber loops can be attached.

Dimensions 38 x 48 x 5 cm.

CODE 279170310 PAX-Tec material

PAX DIVIDER SYSTEM EMERGENCY BACKPACK P5/11 2.0

Large module with individual dividers, two large transparent covers with magnetic closure, and 9 eyelets on the bottom for securing it inside the backpack.

Dimensions 37 x 48 x 10 cm.

CODE 282544510 PAX-Tec material

PAX FUNCTION MODULE P5/11 2.0 ADVANCED - DRUGS

Functional module with PAX clip-in system and small transparent pockets.

Dimensions 37 x 28 x 11 cm.

CODE 278844510 PAX-Tec material

PAX CENTRAL PARTITION P5/11 2.0 XL - AMPOULE

Central divider panel with PCI System XL, also usable as a lid. Optional rows of rubber loops can be attached.

Dimensions 38 x 48 x 5 cm.

CODE 279160310 PAX-Tec material

PAX FUNCTION MODULE P5/11 2.0 - LS

Functional module compatible with the Access/ Infusion or Intubation functional module.

Dimensions 37 x 10 x 12 cm.

CODE 278684510 PAX-Tec material

PAX LID MODULE P5/11 2.0 - CIRCULATION

Circulation lid module with rubber loops and transparent pockets. Can be used or mounted individually. The lid closes magnetically.

Dimensions 36 x 48 x 5 cm.

CODE 278710310 PAX-Tec material

PAX FUNCTION MODULE P5/11 2.0 - INTUBATION

Functional module designed to store materials for i.v. and i.o. access, or to hold the bone drill. Transparent pocket on the lid divider, pockets for inserts, rubber loops with red color coding, loops and divider for the base area.

Dimensions 37 x 10 x 20 cm.

CODE 278704510 PAX-Tec material

PAX FUNCTION MODULE P5/11 2.0 - OXYGEN TRANSPORT

Functional module designed to carry a 2L oxygen cylinder, featuring a detachable blue handle and elastic bands for securing masks, flexible tubes, etc. Fold-away rings for stretcher attachment are stored in a zippered compartment.

Dimensions 24,5 x 10 x 48 cm.

CODE 282494510 PAX-Tec material

PAX FUNCTION MODULE P5/11 2.0 - ACCESS / INFUSION

Functional module designed to store materials for i.v. and i.o. access, or to hold a bone drill. Features a transparent pocket on the lid divider, insert pockets, red color-coded rubber loops, as well as loops and a divider for the bottom area.

Dimensions: 37 x 10 x 20 cm.

CODE 278674510 PAX-Tec material

PAX SEE-THROUGH MODULE P5/11 2.0 S

Stabilized transparent module providing space for small items.

Dimensions 12 x 10 x 16 cm
Capacity 1,92 L

CODE 277074510 PAX-Tec material

PAX SEE-THROUGH MODULE P5/11 2.0 - L

Stabilized transparent module that can be equipped with accessories.

Two integrated mounting rails allow the insertion of up to 2 central panels (standard, airway) and one divider variant.

Dimensions 37 x 10 x 16 cm
Capacity 5,78 L

CODE 277044510 PAX-Tec material

PAX SEE-THROUGH MODULE P5/11 2.0 - MLH TOP

Stabilized transparent module that can be equipped with accessories.

Two integrated mounting rails allow the insertion of up to 2 central panels and/or a divider system.

Dimensions 24 x 10 x 32 cm
Capacity 7,54 L

CODE 278584510 PAX-Tec material

PAX SEE-THROUGH MODULE P5/11 2.0 - MLH

Stabilized transparent module that can be equipped with accessories.

Two integrated mounting rails allow the insertion of up to 4 different central panels (transparent pockets, loops, transparent pockets with loops, adjustable loops) and 1 divider variant.

Dimensions: 24 x 10 x 32 cm
Capacity 7,54 L

CODE 278574510 PAX-Tec material

PAX SEE-THROUGH MODULE P5/11 2.0 S

Stabilized transparent PAX module that can be equipped with optional accessories.

Integrated mounting rails allow the insertion of up to 2 central panels and/or a divider system, with a variable layout dividing the space into a maximum of 3 individual compartments.

Dimensions 24 x 10 x 16 cm
Capacity 3,7 L

CODE 277074510 PAX-Tec material

PAX SEE-THROUGH MODULE P5/11 2.0 - MB

Modulo PAX trasparente stabilizzato che può essere dotato di accessori opzionali. Le guide di fissaggio integrate consentono di inserire fino a 2 pannelli centrali.

Dimensioni 18 x 10 x 16 cm
Capacità 2,74 L

CODE 277064510 PAX-Tec material

PAX SEE-THROUGH MODULE P5/11 2.0 - SH

Modulo PAX trasparente stabilizzato che offre spazio per materiali di piccole dimensioni.

Dimensioni 12 x 10 x 32 cm
Capacità 3,7 L

CODE 278564510 PAX-Tec material

PAX FUNCTION MODULE SET P5/11 2.0 XL AIR AMBULANCE - ADVANCED

Set including the following modules:
3x 278744510 Metalisi, Sono, PSA
1x 278754510 Airway Video
1x 278774510 Trocars
1x 278844510 Dressing
1x 278764510 T Pod / Surgical Set

CODE 281104510S PAX-Tec material

PAX FUNCTION MODULE SET P5/11 2.0 XL AIR AMBULANCE - BASIC 1

Set including the following modules:
3x 278794510 Pediatric ventilation, suction, trauma
1x 278804510 Basic diagnostics
2x 278814510 Adult ventilation, airways
1x 278784510 IV/IO access

CODE 281114510S PAX-Tec material

PAX FUNCTION MODULE SET P5/11 2.0 XL AIR AMBULANCE - BASIC 2

Set including the following modules:
1x 278794510 Pediatric ventilation, suction, trauma
1x 278804510 Basic diagnostics
1x 278784510 IV/IO access
2x 278814510 Adult ventilation, airways
1x 278824510 Suction
1x 278834507 Oxygen

CODE 281124510S PAX-Tec material

PAX INNER POUCH SET 1 - WELDED

Set of 4 inner bags with Velcro® for customizing PAX bags/backpacks: 4 colors and 2 sizes.

CODE 130363200 PAX-Tec material

PAX INNER POUCH SET 2 - WELDED

Set of 5 inner bags with Velcro® for customizing PAX bags/backpacks: 4 colors and 3 sizes.

CODE 130373200 PAX-Tec material

PAX SET INNER POUCH SET 3 - WELDED

Set of 9 inner bags with Velcro® for customizing PAX bags/backpacks: 6 colors and 4 sizes.

CODE 133743200 PAX-Tec material

PAX INNER POUCH SET CHILD EMERGENCY - WELDED

Set of 5 inner bags with Velcro® for customizing PAX bags/backpacks: 4 colors and 2 sizes.

CODE 130383200 PAX-Tec material

PAX INNER POUCH S - VELCRO

Inner bag size S with Velcro® for customizing PAX bags/backpacks.

CODE 102093201 PAX-Tec material
CODE 102093203 PAX-Tec material
CODE 102093204 PAX-Tec material
CODE 102093205 PAX-Tec material
CODE 102093207 PAX-Tec material
CODE 102093211 PAX-Tec material

PAX INNER POUCH M - WELDED

Inner bag size M with Velcro® for customizing PAX bags/backpacks.

CODE 102103201 PAX-Tec material
CODE 102103203 PAX-Tec material
CODE 102103204 PAX-Tec material
CODE 102103205 PAX-Tec material
CODE 102103207 PAX-Tec material
CODE 102103211 PAX-Tec material

PAX INNER POUCH SIZE L

Inner bag size L with Velcro® for customizing PAX bags/backpacks.

CODE 102113201 PAX-Tec material
CODE 102113204 PAX-Tec material
CODE 102113205 PAX-Tec material
CODE 102113207 PAX-Tec material
CODE 102113211 PAX-Tec material

PAX INNER POUCH FT - WELDED

Inner bag size FT with Velcro® for customizing PAX bags/backpacks.

CODE 102123201 PAX-Tec material
CODE 102123204 PAX-Tec material
CODE 102123205 PAX-Tec material
CODE 102123207 PAX-Tec material
CODE 102123211 PAX-Tec material

PAX AMPOULE HOLDER XS

Dimensions 17,5 x 10 x 12.5 cm
Capacity 2,2 L
Weight 0,33 kg
Fits into the external pockets of emergency bags marked with PRO
It can hold up to 24 ampoules (1–2 ml), 5 ampoules (5 ml), and 5 ampoules (10 ml)

CODE 200900301 PAX-Tec material
CODE 200900307 PAX-Tec material
CODE 200900308 PAX-Tec material

PAX AMPOULE HOLDER S

Dimensions 23,5 x 10,5 x 1,5 cm
Capacity 3,2 L
Weight 0,43 kg
It can hold up to 36 ampoules (1–2 ml), 10 ampoules (5 ml), and 10 ampoules (10 ml)

CODE 200910301 PAX-Tec material
CODE 200910307 PAX-Tec material
CODE 200910308 PAX-Tec material

PAX AMPOULE HOLDER L

Dimensions 27 x 23 x 10 cm
Capacity 6,2 L
Weight 0,70 kg
It can hold 40 vials of 1–2 ml, 12 vials of 5 ml, 10 vials of 10 ml, and up to 5 injection vials.

CODE 200920301 PAX-Tec material
CODE 200920307 PAX-Tec material
CODE 200920308 PAX-Tec material

PAX AMPOULE HOLDER XL

Dimensions 33 x 23 x 9,5 cm
Capacity 7,2 L
Weight 0,80 kg
An XL expansion kit is also available for this model.
It can hold up to 75 ampoules (1–2 ml), 25 ampoules (5 ml), 16 ampoules (10 ml), and up to 8 injection vials.

CODE 200940301 PAX-Tec material
CODE 200940307 PAX-Tec material
CODE 200940208 PAX-Plan material

PAX AMPOULE HOLDER M

Dimensions: 29 x 22 x 7,5 cm
Capacity: 4,8 L
Weight: 0,53 kg
It can hold up to 33 vials of 1-2 ml, 19 vials of 5 ml, 30 vials of 10 ml, and 8 injection vials.

CODE 201070301 PAX-Tec material
CODE 201070308 PAX-Tec material

PAX AMPOULE HOLDER XL VARIABLE

Dimensions 33 x 23 x 9,5 cm
Capacity 7,2 L
Weight 0,94 kg
Adjustable elastic loops.

CODE 201050301 PAX-Tec material

PAX AMPOULE HOLDER MODUL XL - PCI - POS

Dimensions 33 x 23 x 9,5 cm
Capacity 7,2 L
Weight 0,20 kg
It can hold between 40 and 100 units.

CODE 245900301 PAX-Tec material
CODE 245900307 PAX-Tec material

PAX AMPOULE HOLDER MODULE XL CLIP-IN POS - CARBON

Dimensions 33 x 23 x 9,5 cm
Capacity 7,2 L
Weight 1,40 kg
It can hold between 40 and 100 units
Carbon version for enhanced weight savings.

CODE 247430301 PAX-Tec material
CODE 247430307 PAX-Tec material

PAX AMPOULE HOLDER P5/11 M CLIP-IN

Dimensions 30 x 11 x 24 cm
Capacity 7.92 L
Weight 1,93 kg
Magnetic attachment system
Equivalent to two "ML" transparent modules within the P5/11 modular system and stored vertically in the backpack
It can hold between 40 and 90 vials.

CODE 282364510 PAX-Tec material

PAX AMPOULE HOLDER P5/11 L CLIP-IN - 2.0 - CARBON

Dimensions 36 x 11 x 30 cm
Capacity 11,88 L
Weight 2,24 kg
Magnetic attachment system
Equivalent to two "L" transparent modules within the P5/11 modular system
It can hold up to 140 vials
Carbon version available for greater weight savings.

CODE 285164510 PAX-Tec material

PAX AMPOULE HOLDER P5/11 L CLIP-IN 2.0

Dimensions 58 x 57 x 32,5 cm
Capacity 61,89 L
Weight 3,50 kg
Magnetic attachment system
Equivalent to two "L" transparent modules within the P5/11 modular system
It can hold up to 140 vials.

CODE 282434510 PAX-Tec material

PAX AMPOULE HOLDER XL CLIP-IN POS 2.0

Dimensions 33 x 10 x 24 cm
Capacity 7,92 L
Weight 2 kg
Magnetic attachment system
Equivalent to two "ML" transparent modules within the P5/11 modular system and stored vertically in the backpack
It can hold between 40 and 100 vials.

CODE 233634510 PAX-Tec material

PAX AMPOULE HOLDER P5/11 M CLIP-IN - CARBON

Dimensions 30 x 11 x 24 cm
Capacity 7,92 L
Weight 1,70 kg
Magnetic attachment system
Equivalent to two "ML" transparent modules within the P5/11 modular system, stored vertically in the backpack
It can hold between 40 and 90 vials.

CODE 283764510 PAX-Tec material

PAX AMPULLARIUM XL CLIP-IN POS 2.0 - CARBON

Dimensions 33 x 10 x 24 cm
Capacity 7,92 L
Weight 1,67 kg
Magnetic attachment system
It can hold from 40 to 100 vials
Carbon version for enhanced weight savings.

CODE 245734510 PAX-Tec material

PAX PRO SERIES-AMPOULE KIT NARCOTIC SUBSTANCES 5

Dimensions 13,5 x 9 x 6 cm
Capacity 0,7 L
Weight 0,11 kg
It can hold up to 5 vials of 2 ml
Belt-attachable design
Compatible with optional PAX Lock system.

CODE 232570301 PAX-Tec material

PAX PRO SERIES-AMPOULE KIT NARCOTIC SUBSTANCES 9

Dimensions 14 x 14 x 5 cm
Capacity 0,98 L
It can hold vials of various sizes
Belt-attachable design
Compatible with optional PAX Lock system

CODE 224370301 PAX-Tec material
CODE 224370308 PAX-Tec material

PAX AMPOULE HOLDER XL PCI POS 3.0

Dimensions 33 x 10 x 24 cm
Weight 2 kg
Velcro® attachment system
It is integrated into the base and lid and can be equipped with clips for PAX Clip-In System vials in sizes S, M, L or XL 3.0.
It can hold approximately from 70 to 200 vials.

CODE 286274510 PAX-Rip-Tec material

PAX FUNCTION MODULE MEDICATION 3.0

Dimensions 33 x 10 x 24 cm
Weight 1,26 kg
It features a PAX PCI System 3.0 carrier plate integrated into the lid, a base with compartments for smaller items, with transparent lids.
Optional PAX handle P5/11 2.0 (code 27885) can be attached to the outside.
It equipped with clips for PAX Clip-In System vials in sizes S, M, L or XL 3.0.

CODE 289194510 PAX-Rip-Tec material

PAX INFU-WARM-SYSTEM

Dimensions 21 x 40 x 30 cm
Capacity 2,6 L
Weight 0,50 kg
Includes a reusable thermal gel pad and a 1.5 m insulation tube for the infusion system.

CODE 102360401 PAX-Plan material
CODE 102360421 PAX-Plan material

PAX INTUBATION BAG S

Dimensions 31 x 16 x 4 cm
Capacity 10 L
Weight 0,28 kg
Roll-up design in soft blue fabric, closable with a buckle.

CODE 202080407 PAX-Tec material

SPENCER

www.spencer.it/en